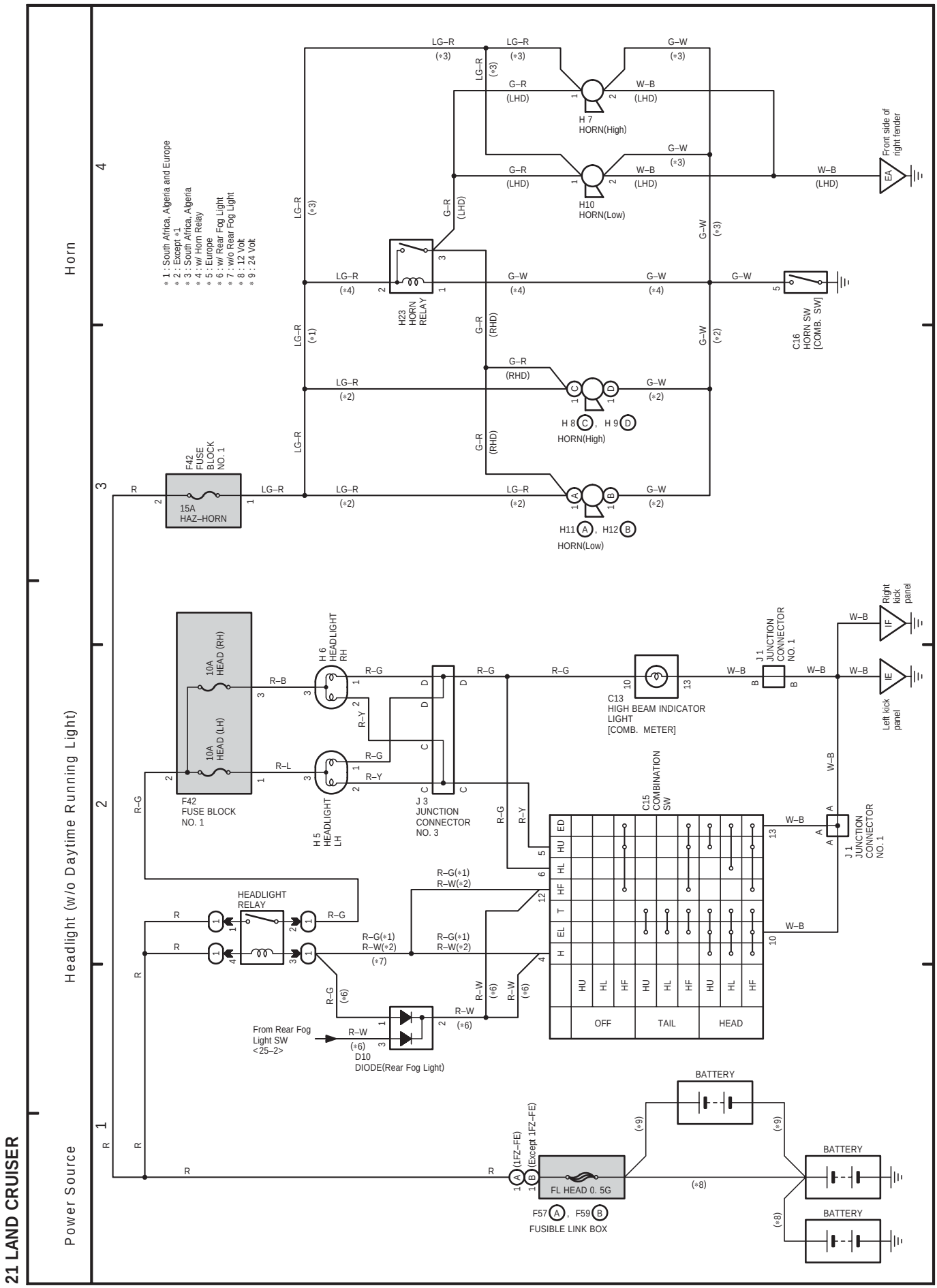
21 LAND CRUISER
Power Source
Headlight (w/o Daytime Running Light)
Horn
1
2
3
4
* 1 : South Africa, Algeria and Europe
* 2 : Except *1
* 3 : South Africa, Algeria
* 4 : w/ Horn Relay
* 5 : Europe
* 6 : w/ Rear Fog Light
* 7 : w/o Rear Fog Light
* 8 : 12 Volt
* 9 : 24 Volt
BATTERY
(*9)
(*8)
(1FZ–FE)
(Except 1FZ–FE)
FL HEAD 0. 5G
F57 (A), F59 (B)
FUSIBLE LINK BOX
F42
FUSE BLOCK
NO. 1
10A
HEAD (RH)
10A
HEAD (LH)
15A
HAZ–HORN
F42
FUSE
BLOCK
NO. 1
H 5
HEADLIGHT
LH
H 6
HEADLIGHT
RH
J 3
JUNCTION
CONNECTOR
NO. 3
HEADLIGHT
RELAY
C13
HIGH BEAM INDICATOR
LIGHT
[COMB. METER]
C15
COMBINATION
SW
OFF
TAIL
HEAD
J 1
JUNCTION
CONNECTOR
NO. 1
Right
kick
panel
Left kick
panel
From Rear Fog
Light SW
<25–2>
D10
DIODE(Rear Fog Light)
H 7
HORN(High)
H10
HORN(Low)
H23
HORN
RELAY
C16
HORN SW
[COMB. SW]
H 8 (C), H 9 (D)
HORN(High)
H11 (A), H12 (B)
HORN(Low)
Front side of
right fender
EA