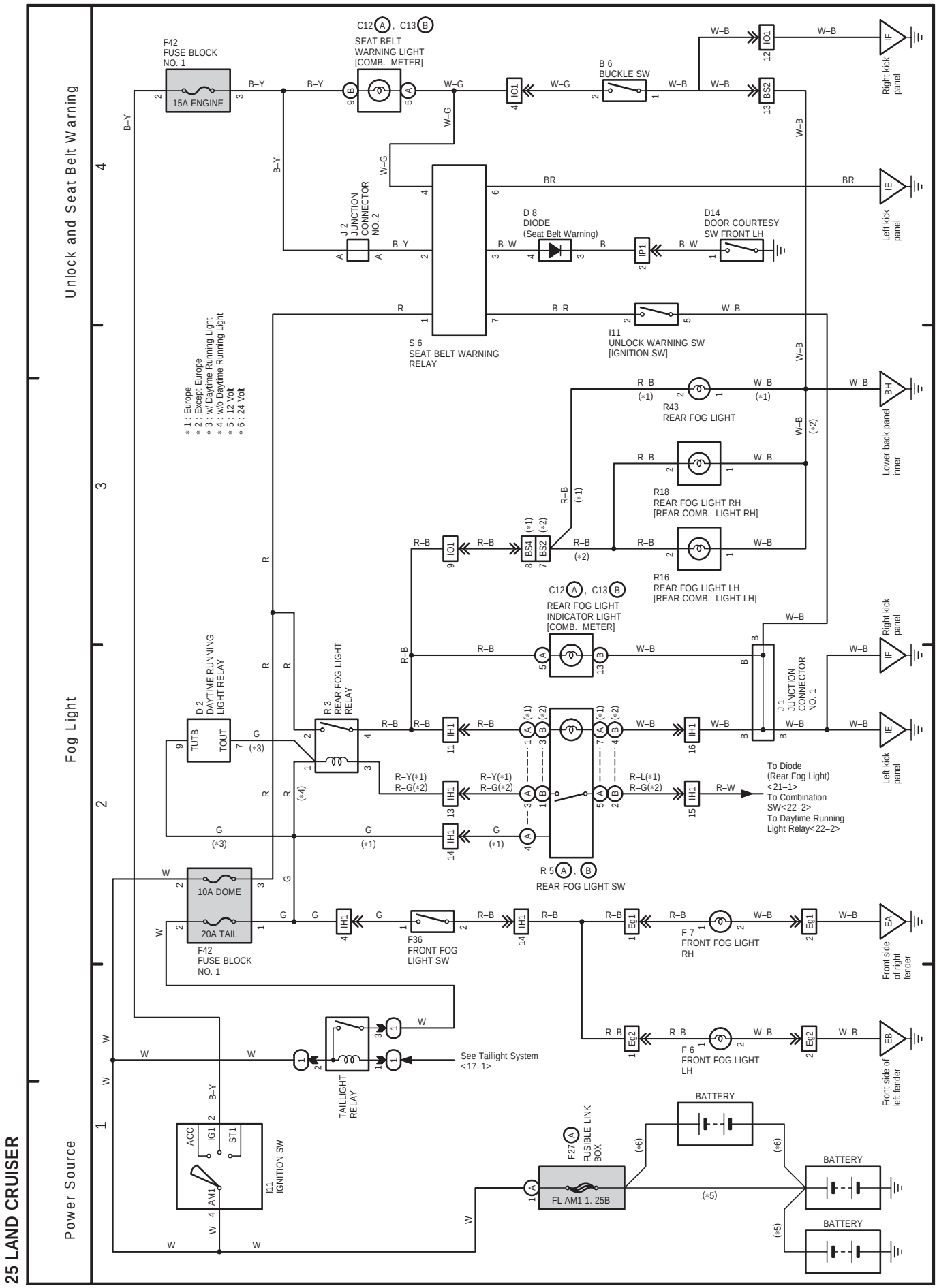
Unlock and Seat Belt Warning
Fog Light
Power Source
F42 FUSE BLOCK NO. 1
15A ENGINE
C12 A, C13 B
SEAT BELT WARNING LIGHT [COMB. METER]
B 6 BUCKLE SW
Right kick panel
Left kick panel
J 2 JUNCTION CONNECTOR NO. 2
D 8 DIODE (Seat Belt Warning)
D14 DOOR COURTESY SW FRONT LH
S 6 SEAT BELT WARNING RELAY
I11 UNLOCK WARNING SW [IGNITION SW]
* 1 : Europe
* 2 : Except Europe
* 3 : w/ Daytime Running Light
* 4 : w/o Daytime Running Light
* 5 : 12 Volt
* 6 : 24 Volt
R43 REAR FOG LIGHT
Lower back panel inner
R18 REAR FOG LIGHT RH [REAR COMB. LIGHT RH]
R16 REAR FOG LIGHT LH [REAR COMB. LIGHT LH]
C12 A, C13 B
REAR FOG LIGHT INDICATOR LIGHT [COMB. METER]
D 2 DAYTIME RUNNING LIGHT RELAY
R 3 REAR FOG LIGHT RELAY
J 1 JUNCTION CONNECTOR NO. 1
To Diode (Rear Fog Light) <21–1>
To Combination SW<22–2>
To Daytime Running Light Relay<22–2>
R 5 A, B
REAR FOG LIGHT SW
10A DOME
20A TAIL
F42 FUSE BLOCK NO. 1
F36 FRONT FOG LIGHT SW
F 7 FRONT FOG LIGHT RH
F 6 FRONT FOG LIGHT LH
Front side of right fender
Front side of left fender
See Taillight System <17–1>
TAILLIGHT RELAY
I11 IGNITION SW
F27 A FUSIBLE LINK BOX
FL AM1 1. 25B
BATTERY
BATTERY
BATTERY