G OVERALL ELECTRICAL WIRING DIAGRAM

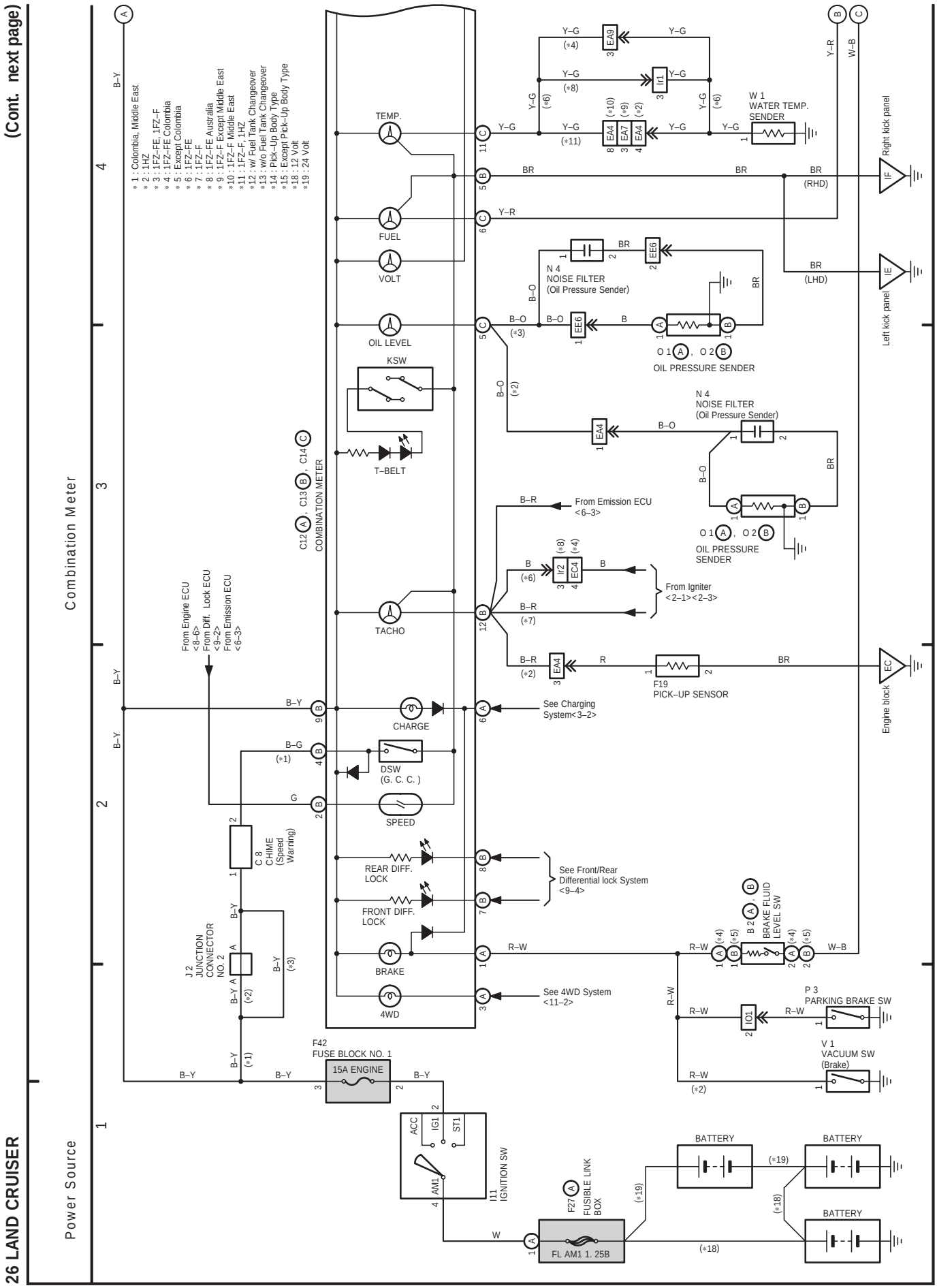

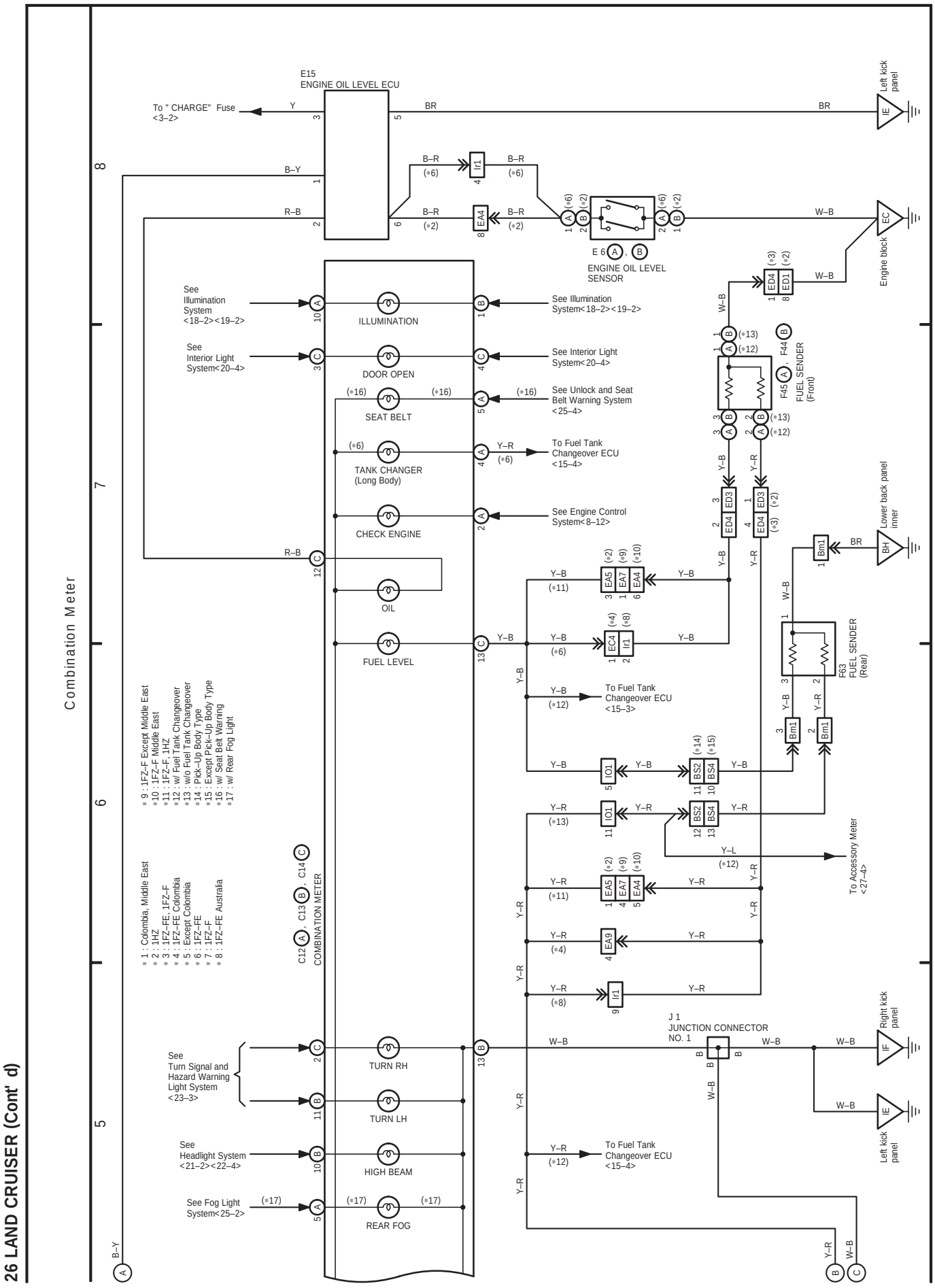
26 LAND CRUISER (Cont' d)
Combination Meter
E15
ENGINE OIL LEVEL ECU
To " CHARGE" Fuse
<3–2>
Left kick panel
Engine block
E 6
ENGINE OIL LEVEL SENSOR
See Illumination System <18–2><19–2>
ILLUMINATION
See Interior Light System<20–4>
DOOR OPEN
SEAT BELT
See Unlock and Seat Belt Warning System <25–4>
TANK CHANGER (Long Body)
To Fuel Tank Changeover ECU <15–4>
CHECK ENGINE
See Engine Control System<8–12>
OIL
FUEL LEVEL
FUEL SENDER (Front)
FUEL SENDER (Rear)
Lower back panel inner
To Fuel Tank Changeover ECU <15–3>
To Accessory Meter <27–4>
J 1
JUNCTION CONNECTOR NO. 1
Right kick panel
See Turn Signal and Hazard Warning Light System <23–3>
TURN RH
TURN LH
See Headlight System <21–2><22–4>
HIGH BEAM
See Fog Light System<25–2>
REAR FOG
C12 (A), C13 (B), C14 (C)
COMBINATION METER
∗1 : Colombia, Middle East
∗2 : 1HZ
∗3 : 1FZ–FE, 1FZ–F
∗4 : 1FZ–FE Colombia
∗5 : Except Colombia
∗6 : 1FZ–FE
∗7 : 1FZ–F
∗8 : 1FZ–FE Australia
∗9 : 1FZ–F Except Middle East
∗10 : 1FZ–F Middle East
∗11 : 1FZ–F, 1HZ
∗12 : w/ Fuel Tank Changeover
∗13 : w/o Fuel Tank Changeover
∗14 : Pick–Up Body Type
∗15 : Except Pick–Up Body Type
∗16 : w/ Seat Belt Warning
∗17 : w/ Rear Fog Light