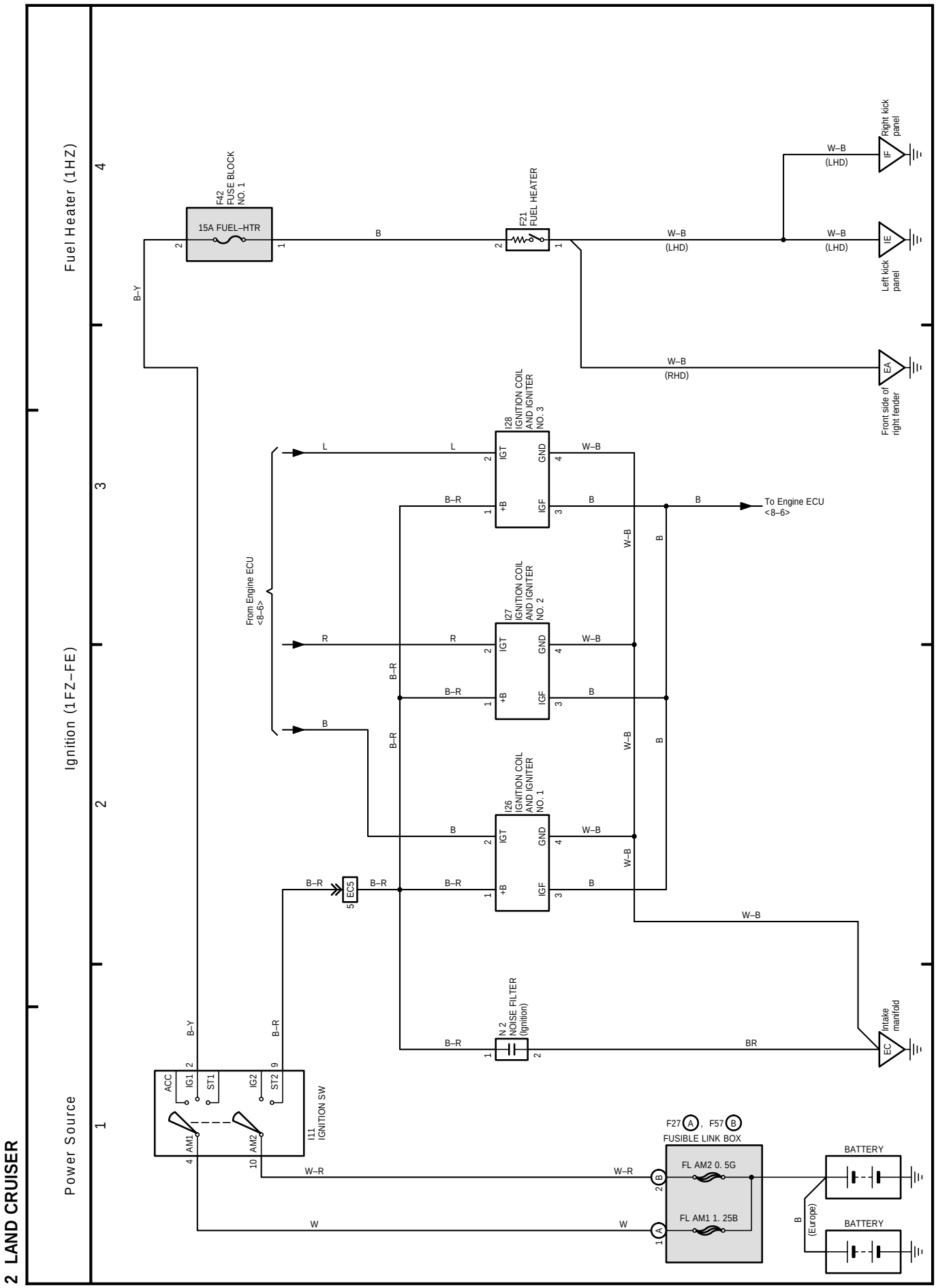
2 LAND CRUISER
Power Source
Ignition (1FZ–FE)
Fuel Heater (1HZ)
1
2
3
4
F42
FUSE BLOCK
NO. 1
15A FUEL–HTR
F21
FUEL HEATER
Right kick panel
Left kick panel
Front side of right fender
W–B
(LHD)
(RHD)
B–Y
B
I28
IGNITION COIL AND IGNITER NO. 3
I27
IGNITION COIL AND IGNITER NO. 2
I26
IGNITION COIL AND IGNITER NO. 1
IGT
GND
+B
IGF
L
R
B–R
To Engine ECU
<8–6>
From Engine ECU
<8–6>
EC5
N.2
NOISE FILTER
(Ignition)
BR
Intake manifold
ACC
IG1
ST1
IG2
ST2
AM1
AM2
I11
IGNITION SW
W–R
W
F27 A , F57 B
FUSIBLE LINK BOX
FL AM2 0. 5G
FL AM1 1. 25B
BATTERY
(Europe)