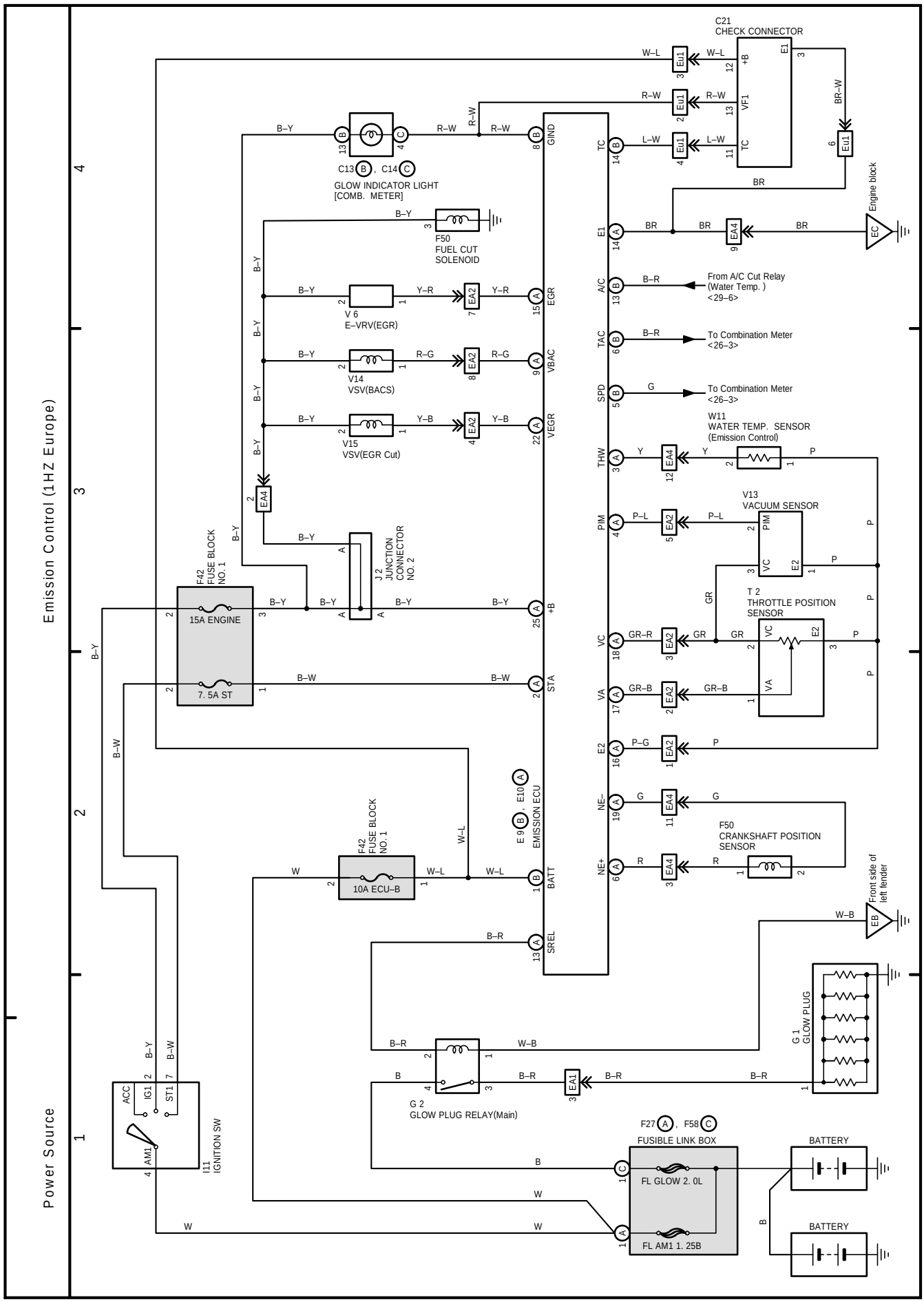
Emission Control (1HZ Europe)
Power Source
C21
CHECK CONNECTOR
C13 B, C14 C
GLOW INDICATOR LIGHT
[COMB. METER]
F50
FUEL CUT
SOLENOID
V 6
E–VRV(EGR)
V14
VSV(BACS)
V15
VSV(EGR Cut)
J 2
JUNCTION
CONNECTOR
NO. 2
F42
FUSE BLOCK
NO. 1
15A ENGINE
7. 5A ST
10A ECU–B
E 9 B, E10 A
EMISSION ECU
From A/C Cut Relay
(Water Temp. )
<29–6>
To Combination Meter
<26–3>
To Combination Meter
<26–3>
W11
WATER TEMP. SENSOR
(Emission Control)
V13
VACUUM SENSOR
T 2
THROTTLE POSITION
SENSOR
F50
CRANKSHAFT POSITION
SENSOR
Engine block
Front side of
left fender
G 1
GLOW PLUG
G 2
GLOW PLUG RELAY(Main)
F27 A, F58 C
FUSIBLE LINK BOX
FL GLOW 2. 0L
FL AM1 1. 25B
BATTERY
BATTERY
I11
IGNITION SW
ACC
IG1
ST1
AM1
GIND
EGR
VBAC
VEGR
+B
STA
BATT
SREL
TC
E1
A/C
TAC
SPD
THW
PIM
VC
VA
E2
NE–
NE+