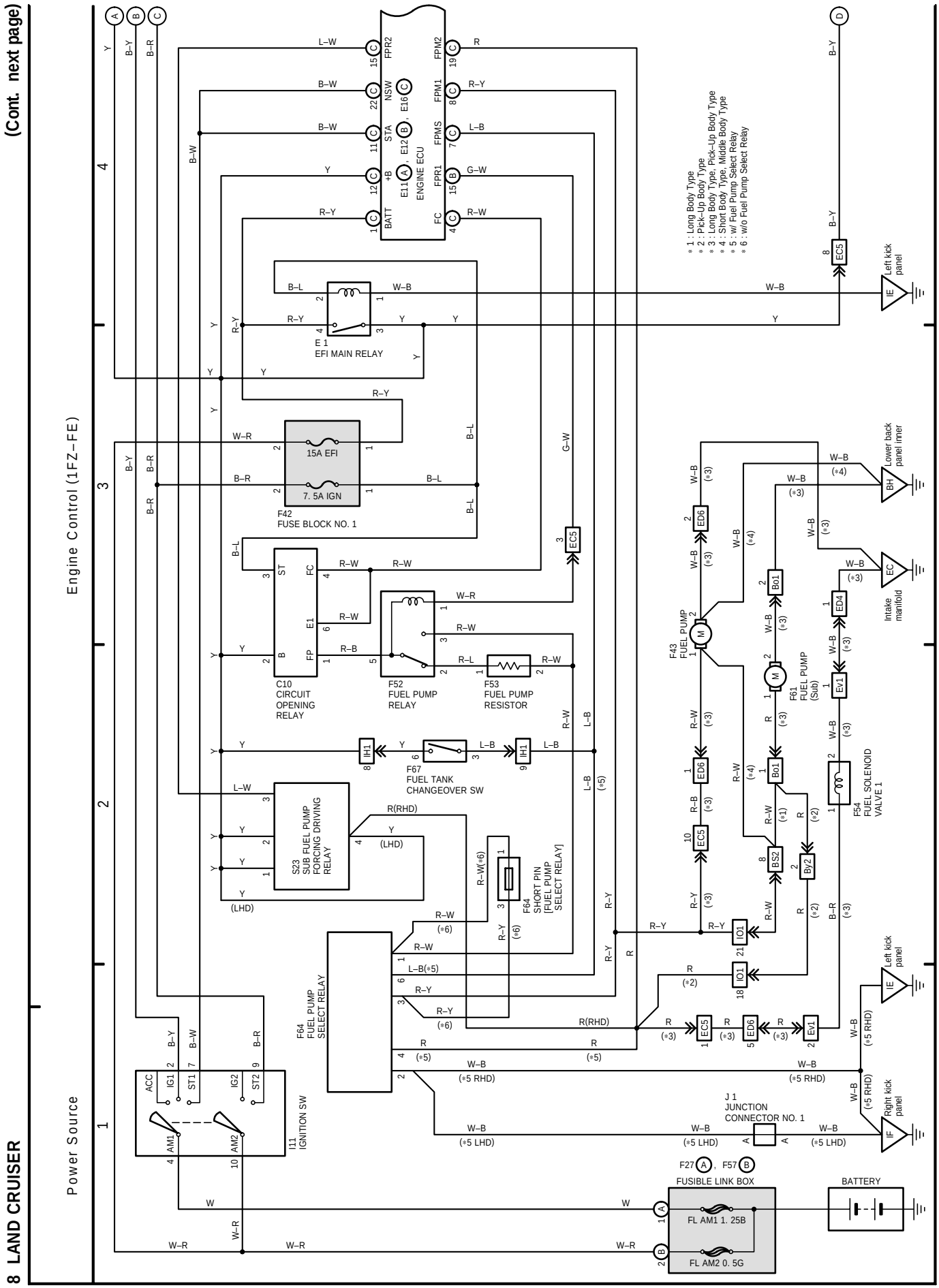
(Cont. next page)
Engine Control (1FZ–FE)
Power Source
8 LAND CRUISER
ENGINE ECU
E 1
EFI MAIN RELAY
15A EFI
7. 5A IGN
F42
FUSE BLOCK NO. 1
C10
CIRCUIT
OPENING
RELAY
F52
FUEL PUMP
RELAY
F53
FUEL PUMP
RESISTOR
F67
FUEL TANK
CHANGEOVER SW
S23
SUB FUEL PUMP
FORCING DRIVING
RELAY
F64
SHORT PIN
[FUEL PUMP
SELECT RELAY]
F64
FUEL PUMP
SELECT RELAY
I11
IGNITION SW
ACC
IG1
ST1
IG2
ST2
AM1
AM2
F43
FUEL PUMP
F61
FUEL PUMP
(Sub)
F54
FUEL SOLENOID
VALVE 1
J 1
JUNCTION
CONNECTOR NO. 1
F27 A , F57 B
FUSIBLE LINK BOX
FL AM1 1. 25B
FL AM2 0. 5G
BATTERY
Left kick
panel
Lower back
panel inner
Intake
manifold
Right kick
panel
* 1 : Long Body Type
* 2 : Pick–Up Body Type
* 3 : Long Body Type, Pick–Up Body Type
* 4 : Short Body Type, Middle Body Type
* 5 : w/ Fuel Pump Select Relay
* 6 : w/o Fuel Pump Select Relay

(Cont. next page)

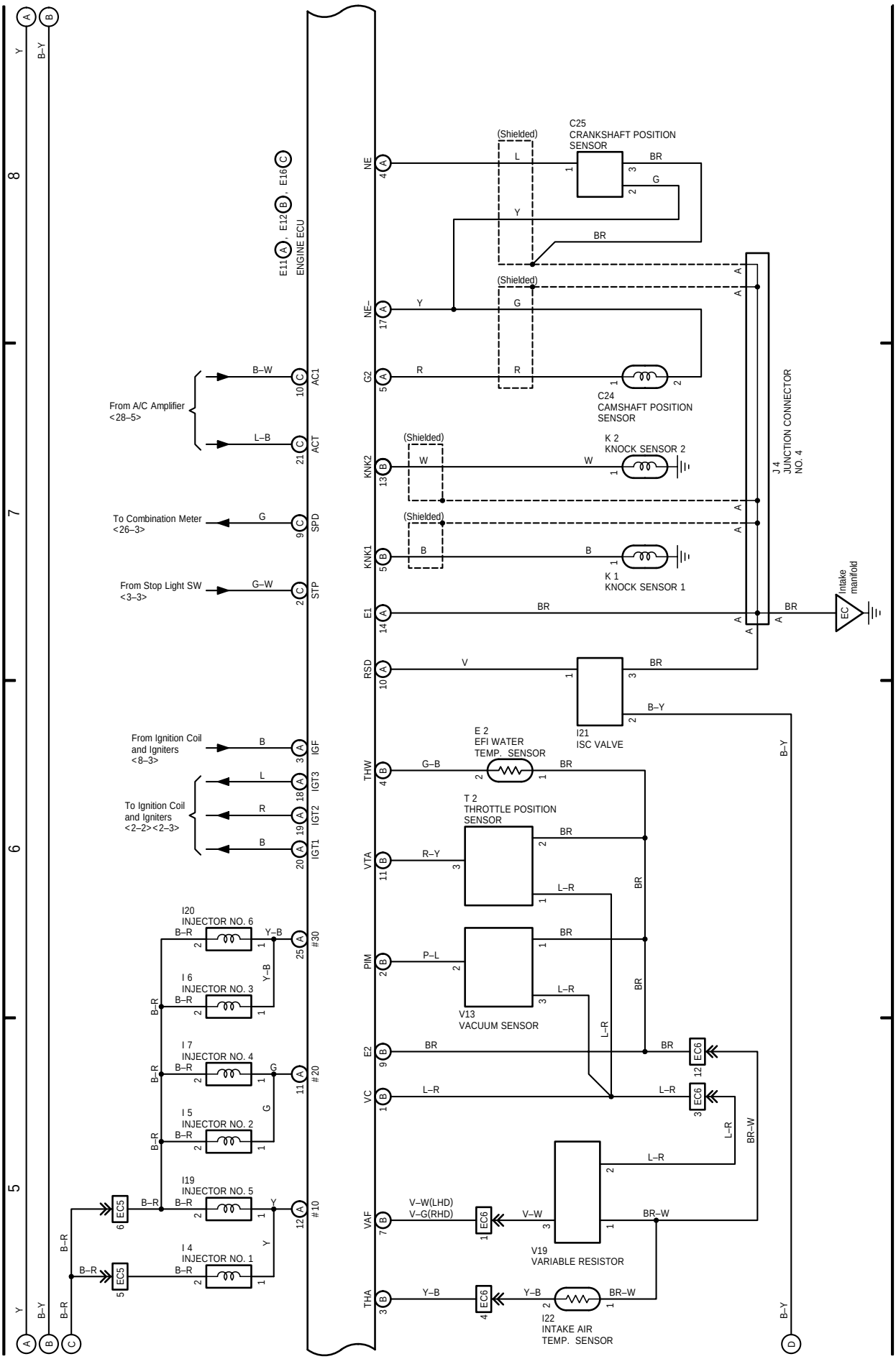

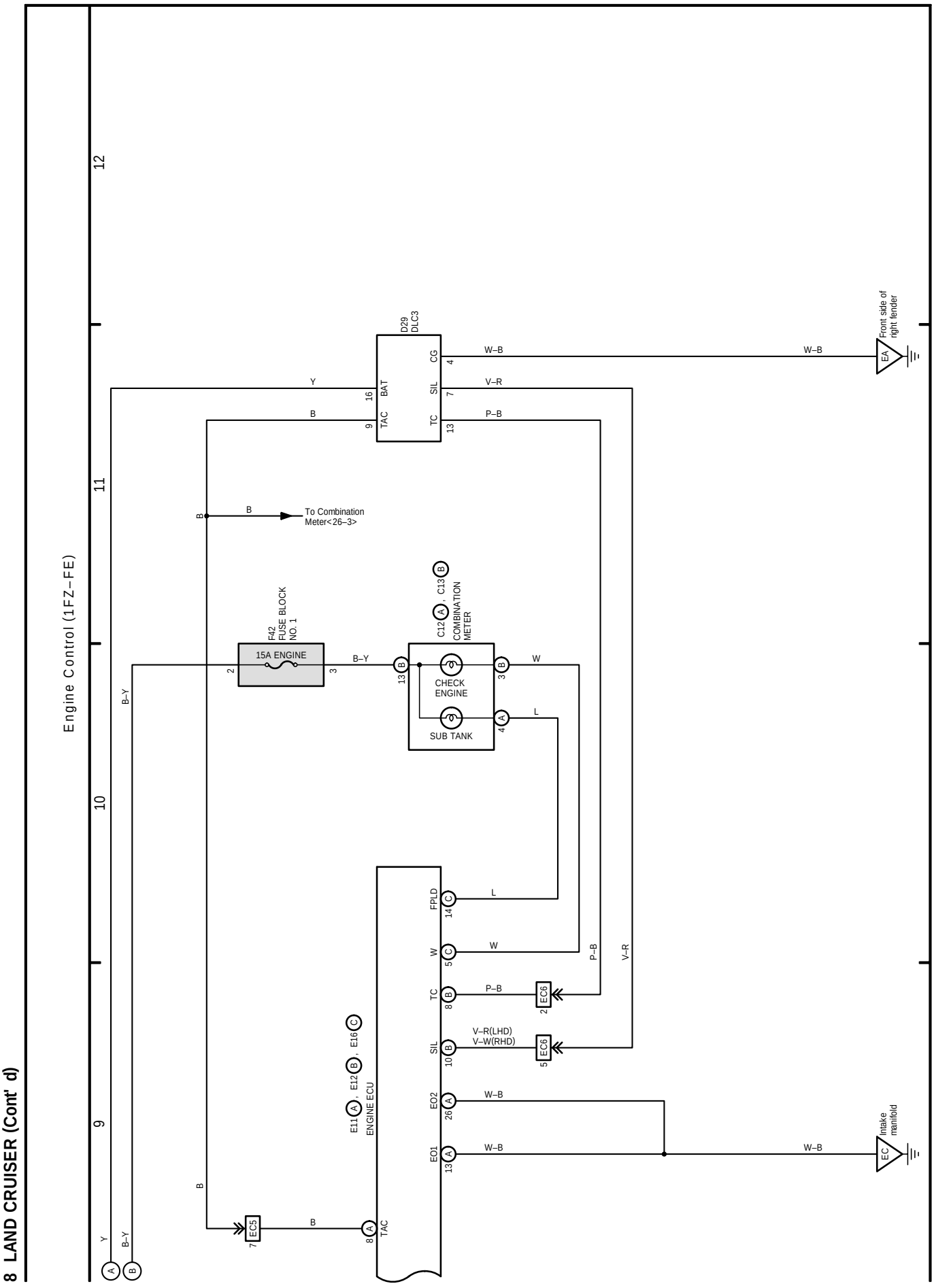
8 LAND CRUISER (Cont' d)
Engine Control (1FZ–FE)
12
11
10
9
D29
DLC3
CG
SIL
TC
BAT
TAC
W–B
V–R
P–B
Y
B
16
9
4
7
13
Front side of
right fender
EA
To Combination
Meter<26–3>
F42
FUSE BLOCK
NO. 1
15A ENGINE
B–Y
2
3
C12 , C13
COMBINATION
METER
CHECK
ENGINE
SUB TANK
W
L
FPLD
14
W
5
P–B
8
EC6
2
V–R(LHD)
V–W(RHD)
10
5
E11 , E12 , E16
ENGINE ECU
EO2
EO1
26
13
Intake
manifold
EC
EC5
7
8
TAC