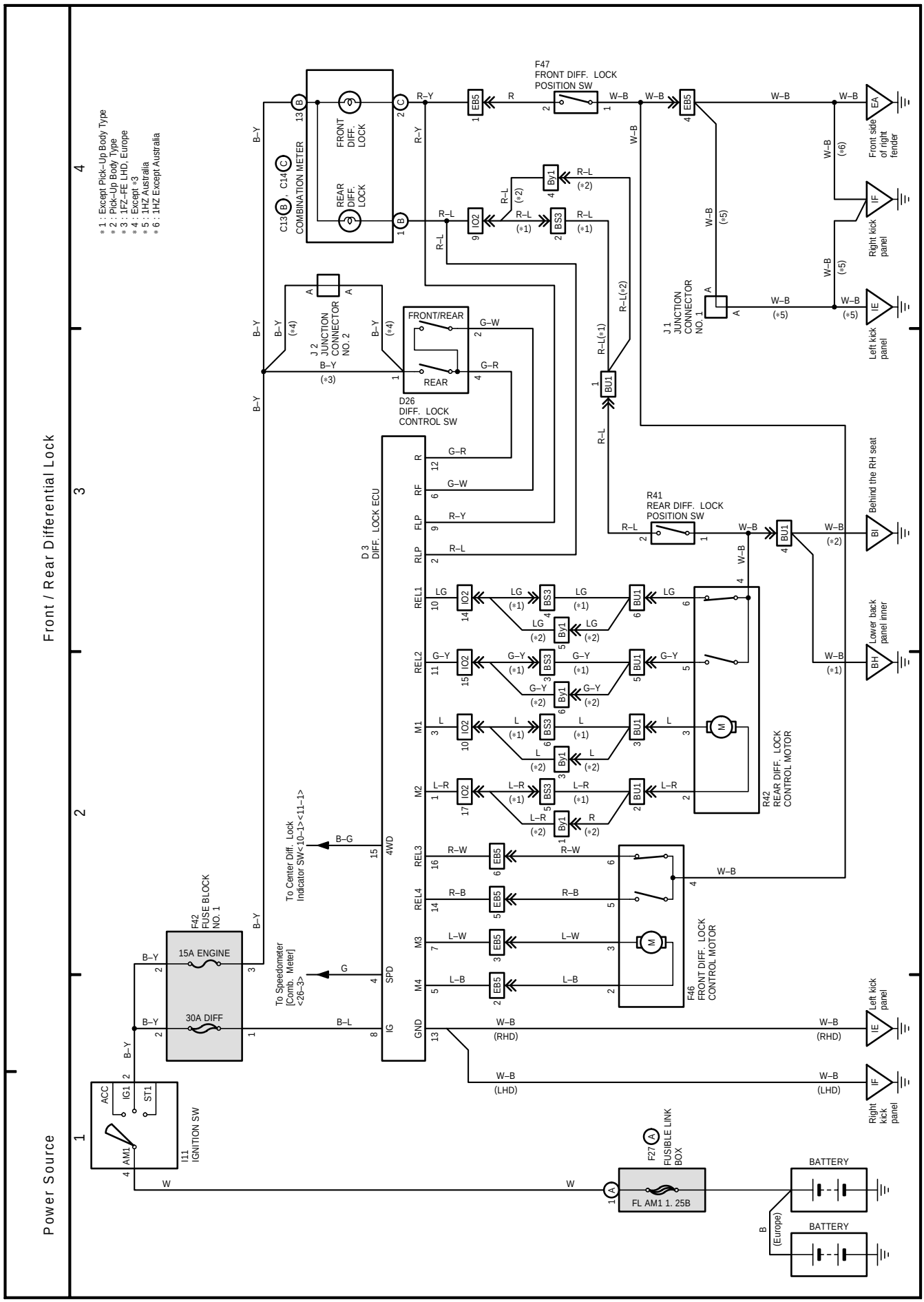
Front / Rear Differential Lock
Power Source
* 1 : Except Pick–Up Body Type
* 2 : Pick–Up Body Type
* 3 : 1FZ–FE LHD, Europe
* 4 : Except *3
* 5 : 1HZ Australia
* 6 : 1HZ Except Australia
F47
FRONT DIFF. LOCK
POSITION SW
C13 C14
COMBINATION METER
FRONT DIFF. LOCK
REAR DIFF. LOCK
J 2
JUNCTION
CONNECTOR
NO. 2
FRONT/REAR
REAR
D26
DIFF. LOCK
CONTROL SW
J 1
JUNCTION
CONNECTOR
NO. 1
R41
REAR DIFF. LOCK
POSITION SW
D 3
DIFF. LOCK ECU
R42
REAR DIFF. LOCK
CONTROL MOTOR
F46
FRONT DIFF. LOCK
CONTROL MOTOR
F42
FUSE BLOCK
NO. 1
15A ENGINE
30A DIFF
I11
IGNITION SW
ACC
IG1
ST1
AM1
F27
FUSIBLE LINK
BOX
FL AM1 1. 25B
BATTERY
(Europe)
To Center Diff. Lock
Indicator SW<10–1><11–1>
To Speedometer
[Comb. Meter]
<26–3>
Front side
of right
fender
Right kick
panel
Left kick
panel
Behind the RH seat
Lower back
panel inner
Right
kick
panel
Left kick
panel