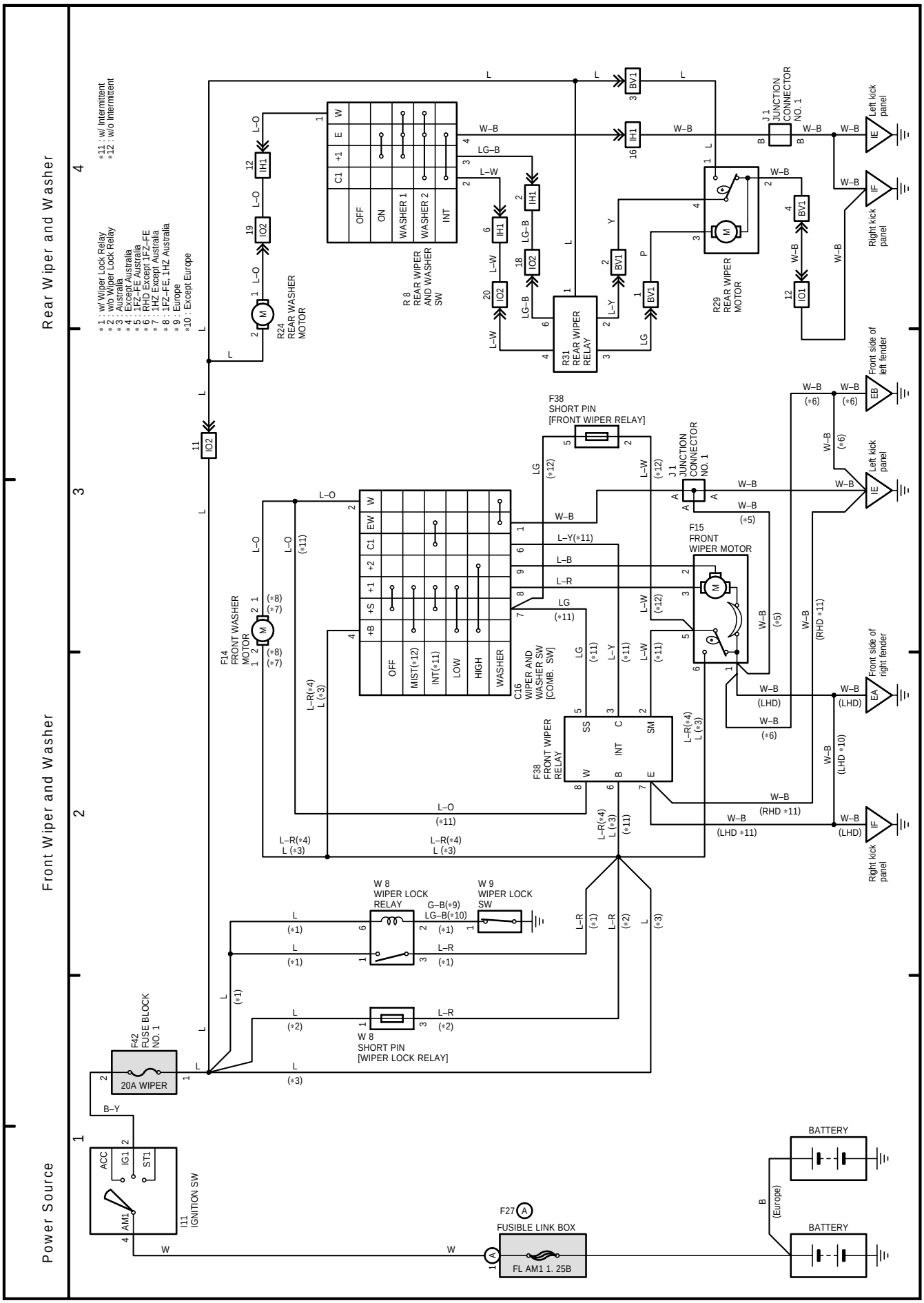
12 LAND CRUISER
Power Source
Front Wiper and Washer
Rear Wiper and Washer
1
2
3
4
*1 : w/ Wiper Lock Relay
*2 : w/o Wiper Lock Relay
*3 : Australia
*4 : Except Australia
*5 : 1FZ–FE Australia
*6 : RHD Except 1FZ–FE
*7 : 1HZ Except Australia
*8 : 1FZ–FE, 1HZ Australia
*9 : Europe
*10 : Except Europe
*11 : w/ Intermittent
*12 : w/o Intermittent
R24 REAR WASHER MOTOR
R 8 REAR WIPER AND WASHER SW
R31 REAR WIPER RELAY
R29 REAR WIPER MOTOR
J 1 JUNCTION CONNECTOR NO. 1
F38 SHORT PIN [FRONT WIPER RELAY]
F14 FRONT WASHER MOTOR
C16 WIPER AND WASHER SW [COMB. SW]
F15 FRONT WIPER MOTOR
F38 FRONT WIPER RELAY
W 8 WIPER LOCK RELAY
W 9 WIPER LOCK SW
W 8 SHORT PIN [WIPER LOCK RELAY]
F42 FUSE BLOCK NO. 1
20A WIPER
I11 IGNITION SW
F27 FUSIBLE LINK BOX
FL AM1 1. 25B
BATTERY
Left kick panel
Right kick panel
Front side of left fender
Front side of right fender