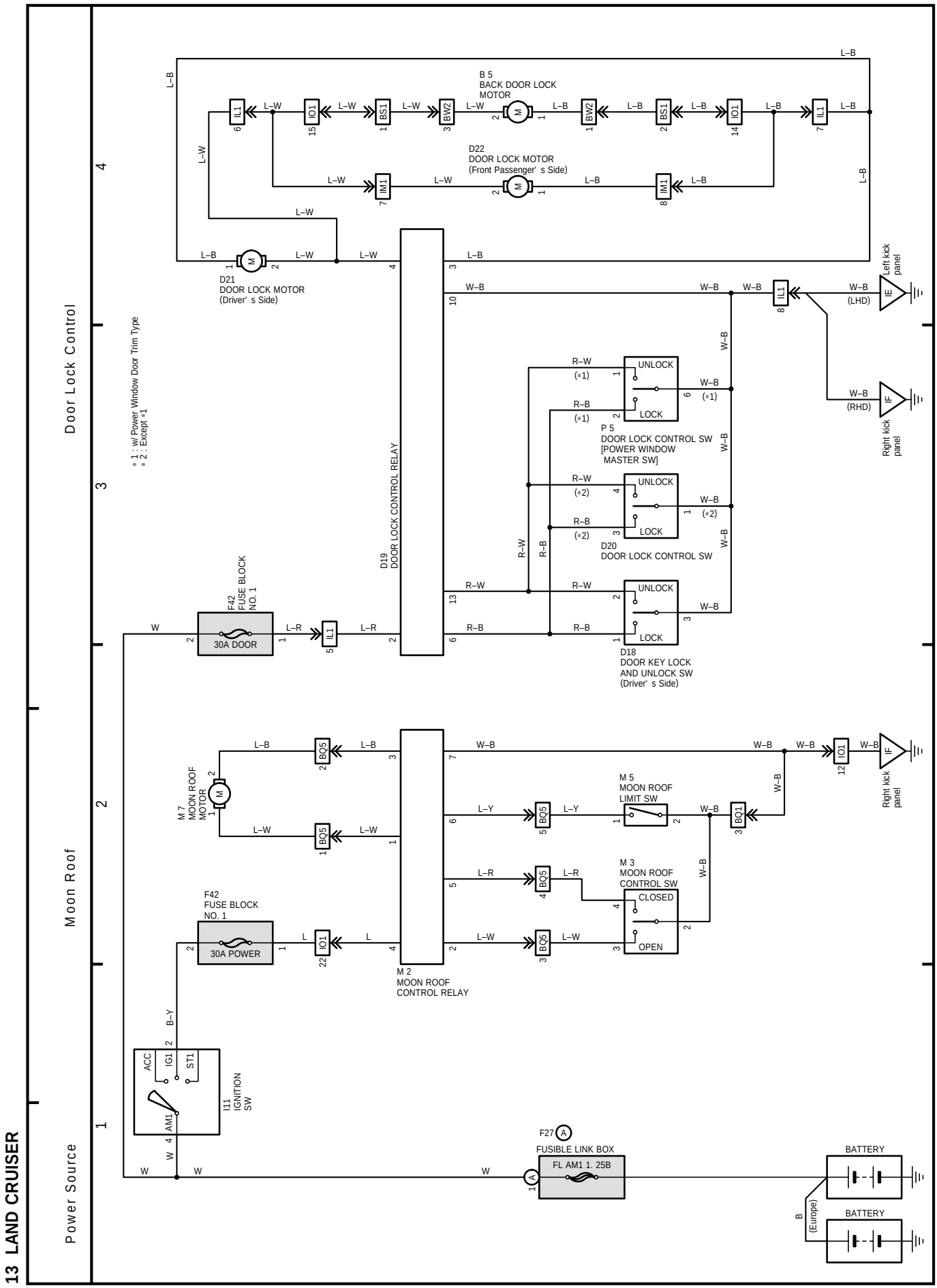
13 LAND CRUISER
Power Source
Moon Roof
Door Lock Control
1
2
3
4
B 5
BACK DOOR LOCK MOTOR
D22
DOOR LOCK MOTOR
(Front Passenger' s Side)
D21
DOOR LOCK MOTOR
(Driver' s Side)
D19
DOOR LOCK CONTROL RELAY
P 5
DOOR LOCK CONTROL SW
[POWER WINDOW MASTER SW]
D20
DOOR LOCK CONTROL SW
D18
DOOR KEY LOCK AND UNLOCK SW
(Driver' s Side)
UNLOCK
LOCK
F42
FUSE BLOCK NO. 1
30A DOOR
30A POWER
M 7
MOON ROOF MOTOR
M 5
MOON ROOF LIMIT SW
M 3
MOON ROOF CONTROL SW
CLOSED
OPEN
M 2
MOON ROOF CONTROL RELAY
I11
IGNITION SW
ACC
IG1
ST1
AM1
F27
FUSIBLE LINK BOX
FL AM1 1, 25B
BATTERY
(Europe)
Left kick panel
Right kick panel
(LHD)
(RHD)
* 1 : w/ Power Window Door Trim Type
* 2 : Except * 1