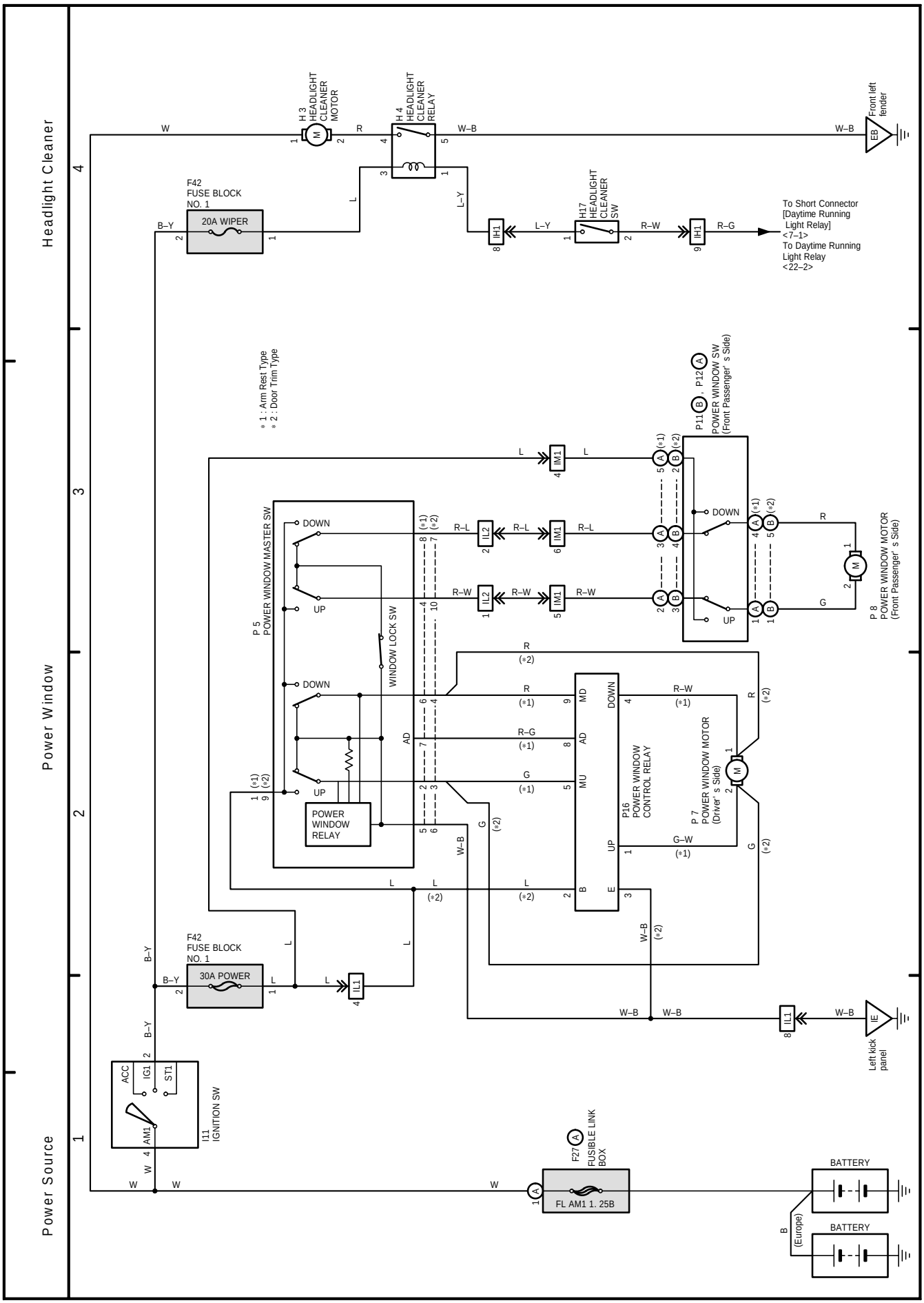
14 LAND CRUISER
Power Source
Power Window
Headlight Cleaner
1
2
3
4
H 3 HEADLIGHT CLEANER MOTOR
H 4 HEADLIGHT CLEANER RELAY
Front left fender
EB
F42 FUSE BLOCK NO. 1
20A WIPER
H17 HEADLIGHT CLEANER SW
To Short Connector [Daytime Running Light Relay] <7–1>
To Daytime Running Light Relay <22–2>
* 1 : Arm Rest Type
* 2 : Door Trim Type
P11 , P12 POWER WINDOW SW (Front Passenger' s Side)
P 5 POWER WINDOW MASTER SW
DOWN
UP
WINDOW LOCK SW
POWER WINDOW RELAY
P16 POWER WINDOW CONTROL RELAY
P 7 POWER WINDOW MOTOR (Driver' s Side)
P 8 POWER WINDOW MOTOR (Front Passenger' s Side)
30A POWER
I11 IGNITION SW
ACC
IG1
ST1
AM1
F27 FUSIBLE LINK BOX
FL AM1 1. 25B
BATTERY
(Europe)
Left kick panel
IE