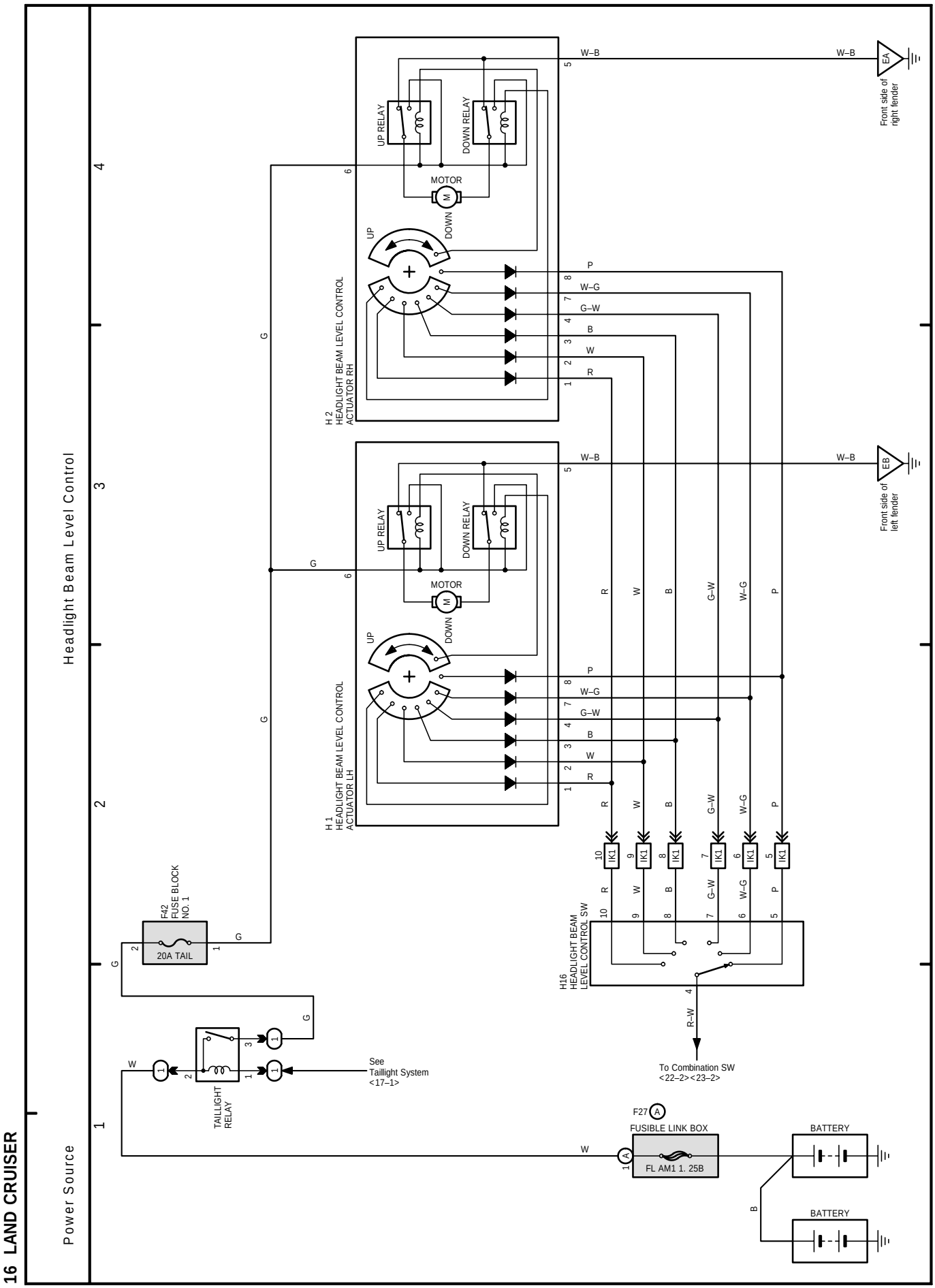
16 LAND CRUISER
Power Source
Headlight Beam Level Control
1
2
3
4
W–B
EA
Front side of right fender
UP RELAY
DOWN RELAY
MOTOR
M
UP
DOWN
H 2
HEADLIGHT BEAM LEVEL CONTROL ACTUATOR RH
P
W–G
G–W
B
W
R
G
W–B
EB
Front side of left fender
H 1
HEADLIGHT BEAM LEVEL CONTROL ACTUATOR LH
IK1
H16
HEADLIGHT BEAM LEVEL CONTROL SW
R–W
To Combination SW
<22–2><23–2>
F42
FUSE BLOCK NO. 1
20A TAIL
TAILLIGHT RELAY
See
Taillight System
<17–1>
F27
FUSIBLE LINK BOX
FL AM1 1. 25B
BATTERY
B