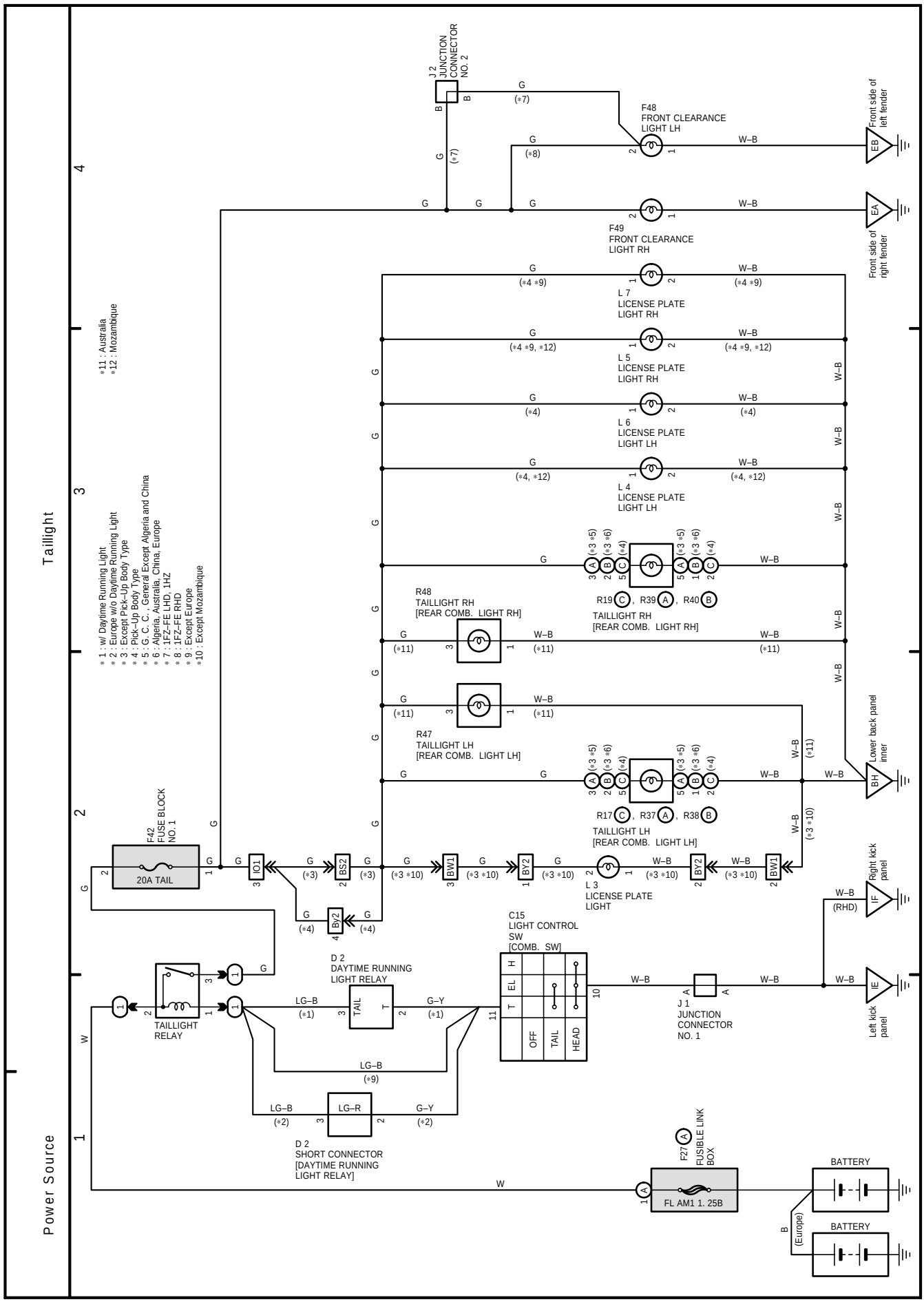
Taillight
Power Source
1
2
3
4
J 2
JUNCTION
CONNECTOR
NO. 2
F48
FRONT CLEARANCE
LIGHT LH
F49
FRONT CLEARANCE
LIGHT RH
Front side of
left fender
Front side of
right fender
EB
EA
L 7
LICENSE PLATE
LIGHT RH
L 5
LICENSE PLATE
LIGHT RH
L 6
LICENSE PLATE
LIGHT LH
L 4
LICENSE PLATE
LIGHT LH
R48
TAILLIGHT RH
[REAR COMB. LIGHT RH]
R19 C , R39 A , R40 B
TAILLIGHT RH
[REAR COMB. LIGHT RH]
R47
TAILLIGHT LH
[REAR COMB. LIGHT LH]
R17 C , R37 A , R38 B
TAILLIGHT LH
[REAR COMB. LIGHT LH]
Lower back panel
inner
BH
F42
FUSE BLOCK
NO. 1
20A TAIL
IO1
BS2
BW1
BY2
By2
L 3
LICENSE PLATE
LIGHT
Right kick
panel
IF
IE
Left kick
panel
C15
LIGHT CONTROL
SW
[COMB. SW]
H
EL
T
OFF
TAIL
HEAD
D 2
DAYTIME RUNNING
LIGHT RELAY
TAIL
T
TAILLIGHT
RELAY
J 1
JUNCTION
CONNECTOR
NO. 1
D 2
SHORT CONNECTOR
[DAYTIME RUNNING
LIGHT RELAY]
LG–R
F27
FUSIBLE LINK
BOX
FL AM1 1. 25B
BATTERY
(Europe)
BATTERY
∗1 : w/ Daytime Running Light
∗2 : Europe w/o Daytime Running Light
∗3 : Except Pick–Up Body Type
∗4 : Pick–Up Body Type
∗5 : G. C. C. , General Except Algeria and China
∗6 : Algeria, Australia, China, Europe
∗7 : 1FZ–FE LHD, 1HZ
∗8 : 1FZ–FE RHD
∗9 : Except Europe
∗10 : Except Mozambique
∗11 : Australia
∗12 : Mozambique