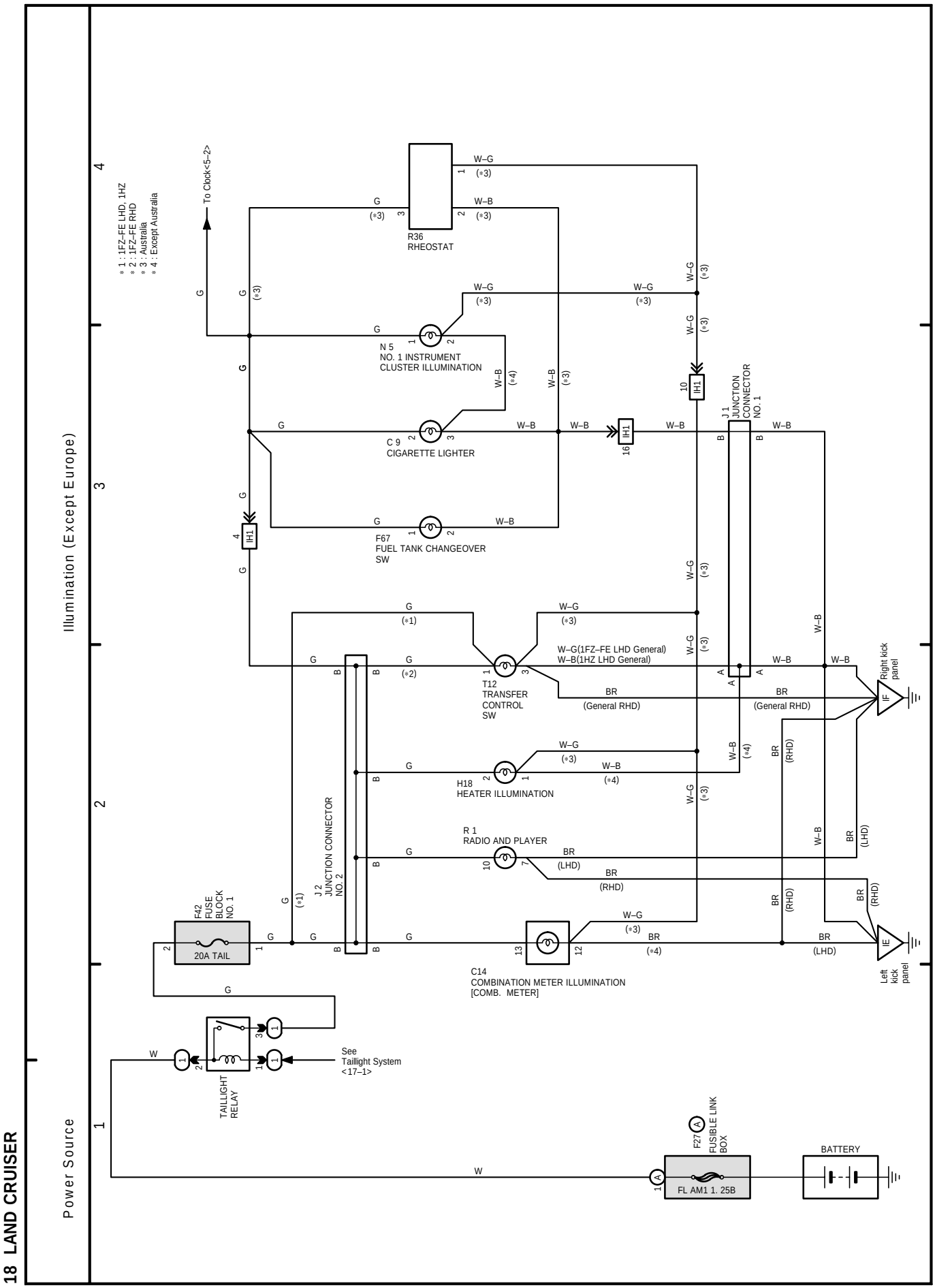
* 1 : 1FZ–FE LHD, 1HZ
* 2 : 1FZ–FE RHD
* 3 : Australia
* 4 : Except Australia
To Clock<5–2>
R36
RHEOSTAT
N 5
NO. 1 INSTRUMENT
CLUSTER ILLUMINATION
C 9
CIGARETTE LIGHTER
F67
FUEL TANK CHANGEOVER
SW
T12
TRANSFER
CONTROL
SW
W–G(1FZ–FE LHD General)
W–B(1HZ LHD General)
H18
HEATER ILLUMINATION
R 1
RADIO AND PLAYER
J 1
JUNCTION
CONNECTOR
NO. 1
J 2
JUNCTION CONNECTOR
NO. 2
F42
FUSE
BLOCK
NO. 1
20A TAIL
C14
COMBINATION METER ILLUMINATION
[COMB. METER]
Right kick
panel
Left
kick
panel
TAILLIGHT
RELAY
See
Taillight System
<17–1>
F27
FUSIBLE LINK
BOX
FL AM1 1. 25B
BATTERY
Illumination (Except Europe)
Power Source
18 LAND CRUISER