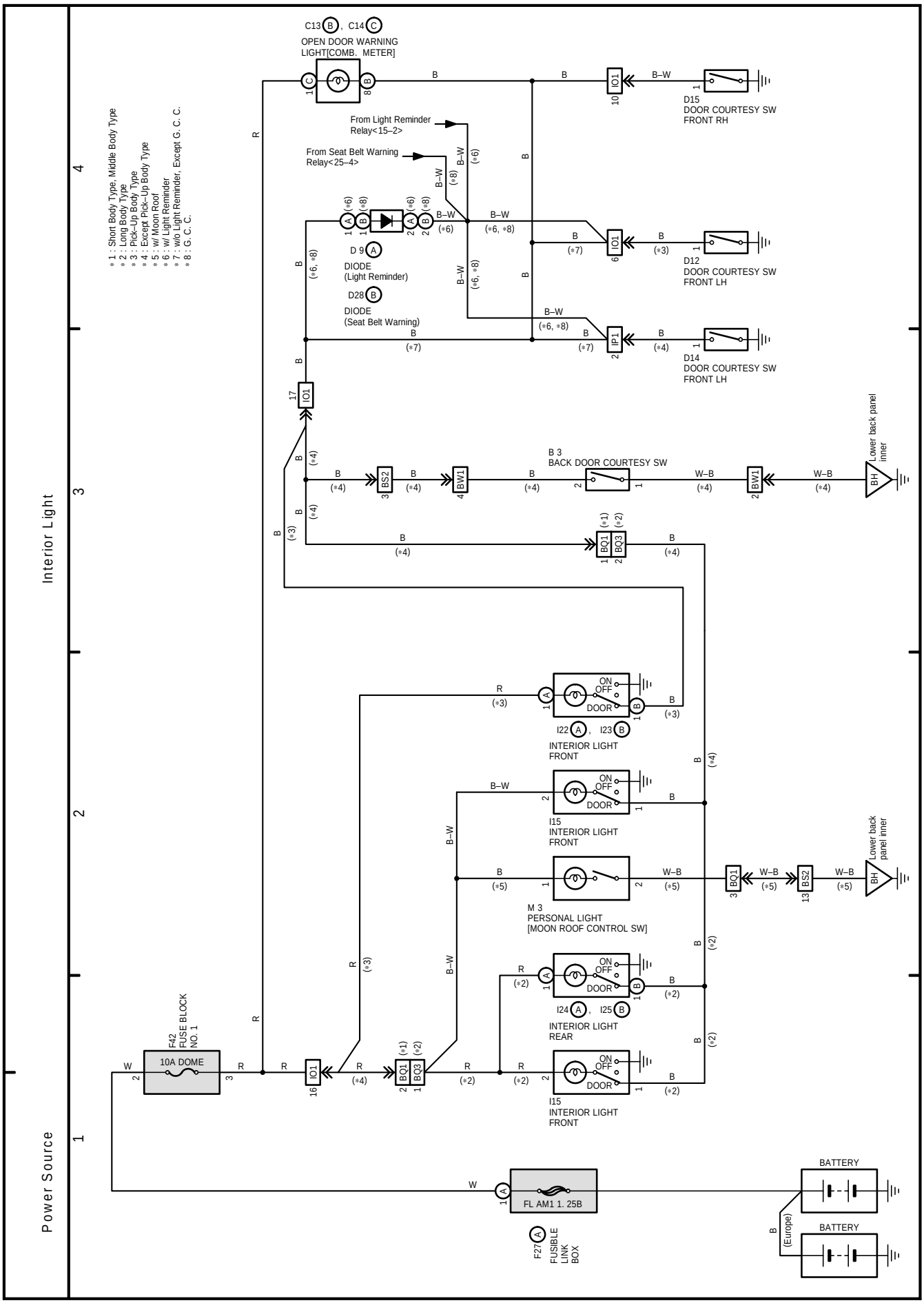
20 LAND CRUISER
Interior Light
Power Source
1
2
3
4
* 1 : Short Body Type, Middle Body Type
* 2 : Long Body Type
* 3 : Pick–Up Body Type
* 4 : Except Pick–Up Body Type
* 5 : w/ Moon Roof
* 6 : w/ Light Reminder
* 7 : w/o Light Reminder, Except G. C. C.
* 8 : G. C. C.
C13 B , C14 C
OPEN DOOR WARNING LIGHT[COMB. METER]
From Light Reminder Relay<15–2>
From Seat Belt Warning Relay<25–4>
D 9 A
DIODE
(Light Reminder)
D28 B
DIODE
(Seat Belt Warning)
D15
DOOR COURTESY SW
FRONT RH
D12
DOOR COURTESY SW
FRONT LH
D14
DOOR COURTESY SW
FRONT LH
B 3
BACK DOOR COURTESY SW
Lower back panel inner
I22 A , I23 B
INTERIOR LIGHT
FRONT
I15
INTERIOR LIGHT
FRONT
M 3
PERSONAL LIGHT
[MOON ROOF CONTROL SW]
I24 A , I25 B
INTERIOR LIGHT
REAR
I15
INTERIOR LIGHT
FRONT
F42
FUSE BLOCK
NO. 1
10A DOME
FL AM1 1. 25B
F27 A
FUSIBLE LINK BOX
BATTERY
BATTERY
(Europe)