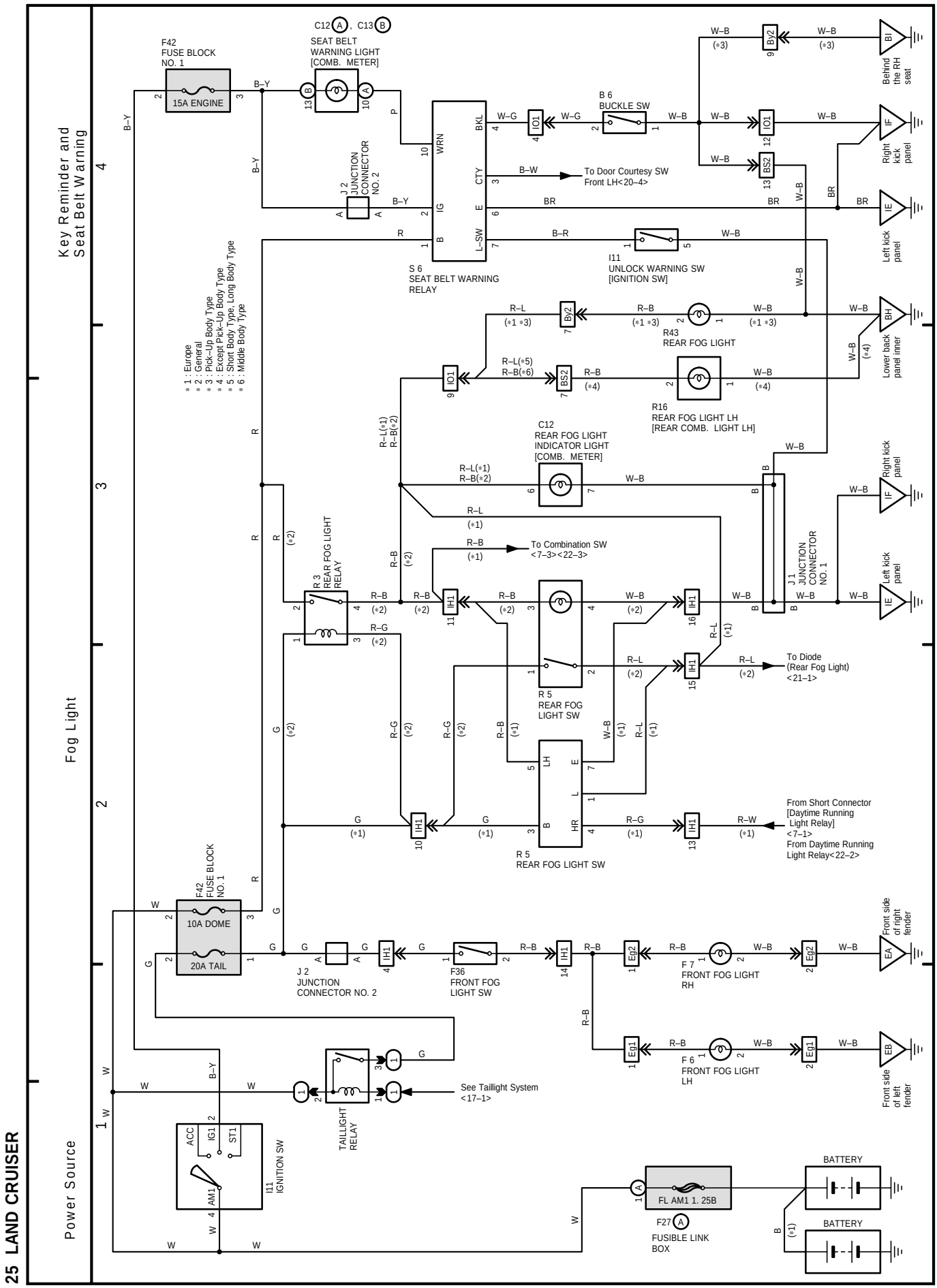
25 LAND CRUISER
Power Source
Fog Light
Key Reminder and Seat Belt Warning
F42 FUSE BLOCK NO. 1
15A ENGINE
C12 A , C13 B
SEAT BELT WARNING LIGHT [COMB. METER]
B 6 BUCKLE SW
J 2 JUNCTION CONNECTOR NO. 2
To Door Courtesy SW Front LH<20–4>
S 6 SEAT BELT WARNING RELAY
I11 UNLOCK WARNING SW [IGNITION SW]
Behind the RH seat
Right kick panel
Left kick panel
Lower back panel inner
R43 REAR FOG LIGHT
R16 REAR FOG LIGHT LH [REAR COMB. LIGHT LH]
C12 REAR FOG LIGHT INDICATOR LIGHT [COMB. METER]
R 3 REAR FOG LIGHT RELAY
To Combination SW <7–3><22–3>
J 1 JUNCTION CONNECTOR NO. 1
R 5 REAR FOG LIGHT SW
To Diode (Rear Fog Light) <21–1>
From Short Connector [Daytime Running Light Relay] <7–1>
From Daytime Running Light Relay<22–2>
F42 FUSE BLOCK NO. 1
10A DOME
20A TAIL
J 2 JUNCTION CONNECTOR NO. 2
F36 FRONT FOG LIGHT SW
F 7 FRONT FOG LIGHT RH
F 6 FRONT FOG LIGHT LH
Front side of right fender
Front side of left fender
See Taillight System <17–1>
TAILLIGHT RELAY
I11 IGNITION SW
ACC
IG1
ST1
AM1
FL AM1 1. 25B
F27 A FUSIBLE LINK BOX
BATTERY
BATTERY
* 1 : Europe
* 2 : General
* 3 : Pick–Up Body Type
* 4 : Except Pick–Up Body Type
* 5 : Short Body Type, Long Body Type
* 6 : Middle Body Type