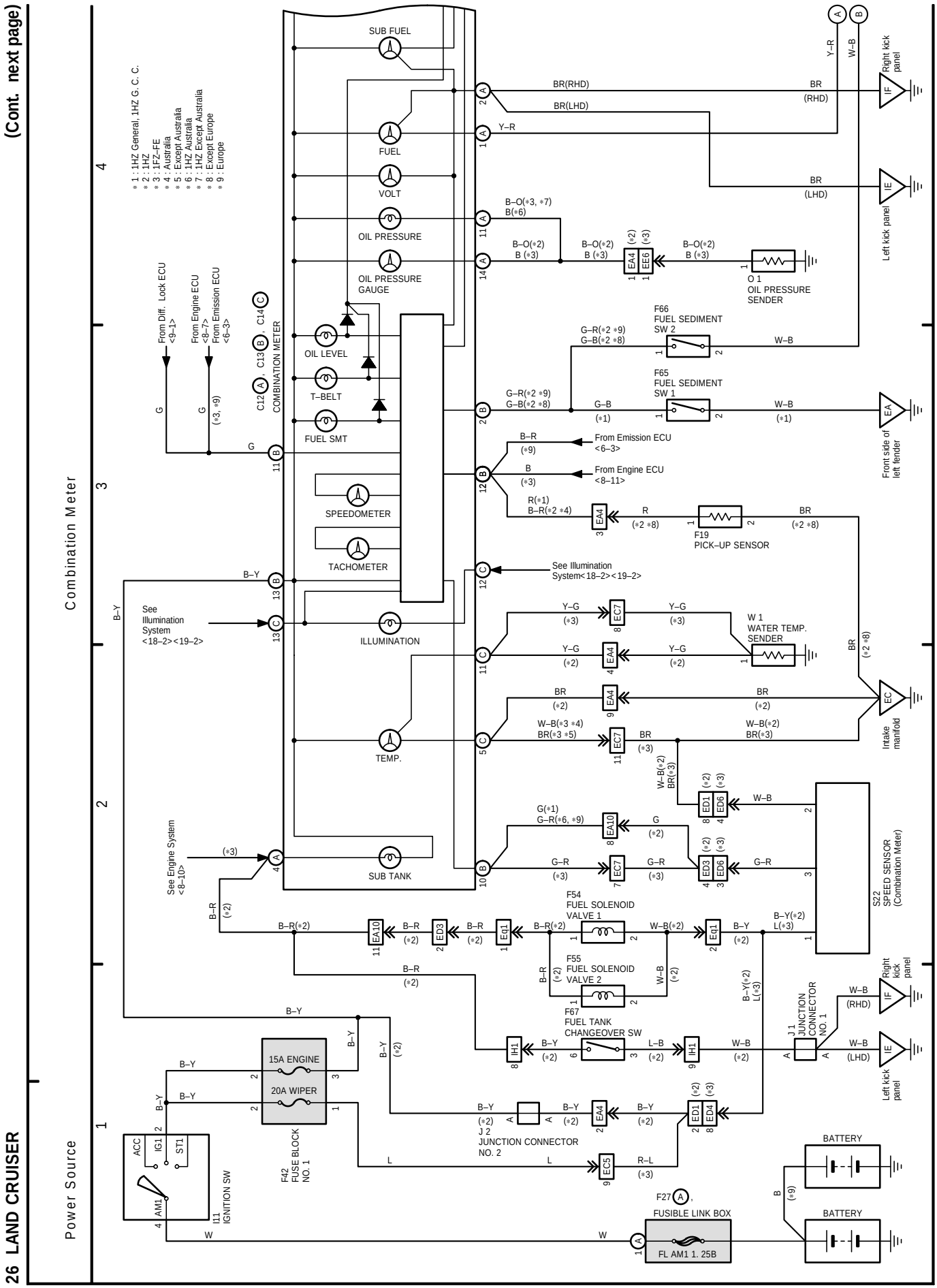
(Cont. next page)
26 LAND CRUISER
Power Source
Combination Meter
* 1 : 1HZ General, 1HZ G. C. C.
* 2 : 1HZ
* 3 : 1FZ–FE
* 4 : Australia
* 5 : Except Australia
* 6 : 1HZ Australia
* 7 : 1HZ Except Australia
* 8 : Except Europe
* 9 : Europe
SUB FUEL
FUEL
VOLT
OIL PRESSURE
OIL PRESSURE GAUGE
OIL LEVEL
T–BELT
FUEL SMT
SPEEDOMETER
TACHOMETER
ILLUMINATION
TEMP.
SUB TANK
COMBINATION METER
From Diff. Lock ECU <9–1>
From Engine ECU <8–7>
From Emission ECU <6–3>
See Illumination System <18–2><19–2>
See Engine System <8–10>
BR(RHD)
BR(LHD)
Y–R
B–O(*3, *7) B(*6)
B–O(*2) B (*3)
O 1 OIL PRESSURE SENDER
F66 FUEL SEDIMENT SW 2
F65 FUEL SEDIMENT SW 1
G–R(*2 *9) G–B(*2 *8)
G–B (*1)
W–B (*1)
Front side of left fender
B–R (*9)
From Emission ECU <6–3>
B (*3)
From Engine ECU <8–11>
R(*1) B–R(*2 *4)
R (*2 *8)
F19 PICK–UP SENSOR
See Illumination System<18–2><19–2>
Y–G (*3)
W 1 WATER TEMP. SENDER
Y–G (*2)
BR (*2)
W–B(*3 *4) BR(*3 *5)
W–B(*2) BR(*3)
Intake manifold
W–B(*2) BR(*3)
G(*1) G–R(*6, *9)
G (*2)
G–R (*3)
S22 SPEED SENSOR (Combination Meter)
F54 FUEL SOLENOID VALVE 1
B–R(*2)
W–B(*2)
B–Y(*2) L(*3)
F55 FUEL SOLENOID VALVE 2
F67 FUEL TANK CHANGEOVER SW
J 1 JUNCTION CONNECTOR NO. 1
Right kick panel
Left kick panel
B–Y
15A ENGINE
20A WIPER
F42 FUSE BLOCK NO. 1
J 2 JUNCTION CONNECTOR NO. 2
L
R–L
ACC
IG1
ST1
AM1
I11 IGNITION SW
F27 (A), FUSIBLE LINK BOX
FL AM1 1. 25B
BATTERY
W

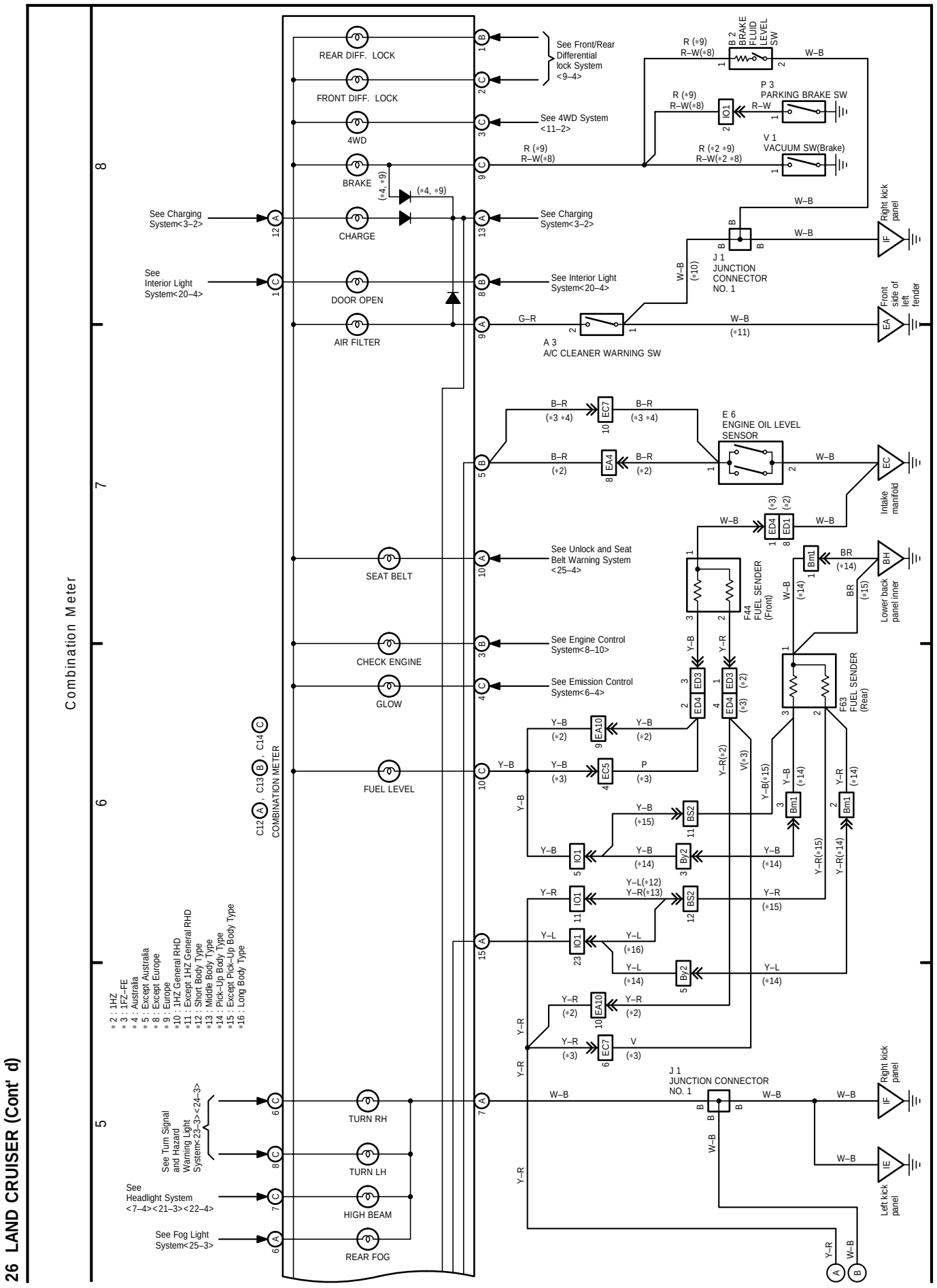
26 LAND CRUISER (Cont' d)
Combination Meter
REAR DIFF. LOCK
FRONT DIFF. LOCK
4WD
BRAKE
CHARGE
DOOR OPEN
AIR FILTER
SEAT BELT
CHECK ENGINE
GLOW
FUEL LEVEL
TURN RH
TURN LH
HIGH BEAM
REAR FOG
See Front/Rear Differential lock System <9–4>
See 4WD System <11–2>
See Charging System<3–2>
See Interior Light System<20–4>
See Unlock and Seat Belt Warning System <25–4>
See Engine Control System<8–10>
See Emission Control System<6–4>
See Turn Signal and Hazard Warning Light System<23–3><24–3>
See Headlight System <7–4><21–3><22–4>
See Fog Light System<25–3>
C12 A , C13 B , C14 C
COMBINATION METER
B 2 BRAKE FLUID LEVEL SW
P 3 PARKING BRAKE SW
V 1 VACUUM SW(Brake)
A 3 A/C CLEANER WARNING SW
J 1 JUNCTION CONNECTOR NO. 1
E 6 ENGINE OIL LEVEL SENSOR
F44 FUEL SENDER (Front)
F63 FUEL SENDER (Rear)
Right kick panel
Front side of left fender
Intake manifold
Lower back panel inner
Left kick panel
∗2 : 1HZ
∗3 : 1FZ–FE
∗4 : Australia
∗5 : Except Australia
∗8 : Except Europe
∗9 : Europe
∗10 : 1HZ General RHD
∗11 : Except 1HZ General RHD
∗12 : Short Body Type
∗13 : Middle Body Type
∗14 : Pick–Up Body Type
∗15 : Except Pick–Up Body Type
∗16 : Long Body Type