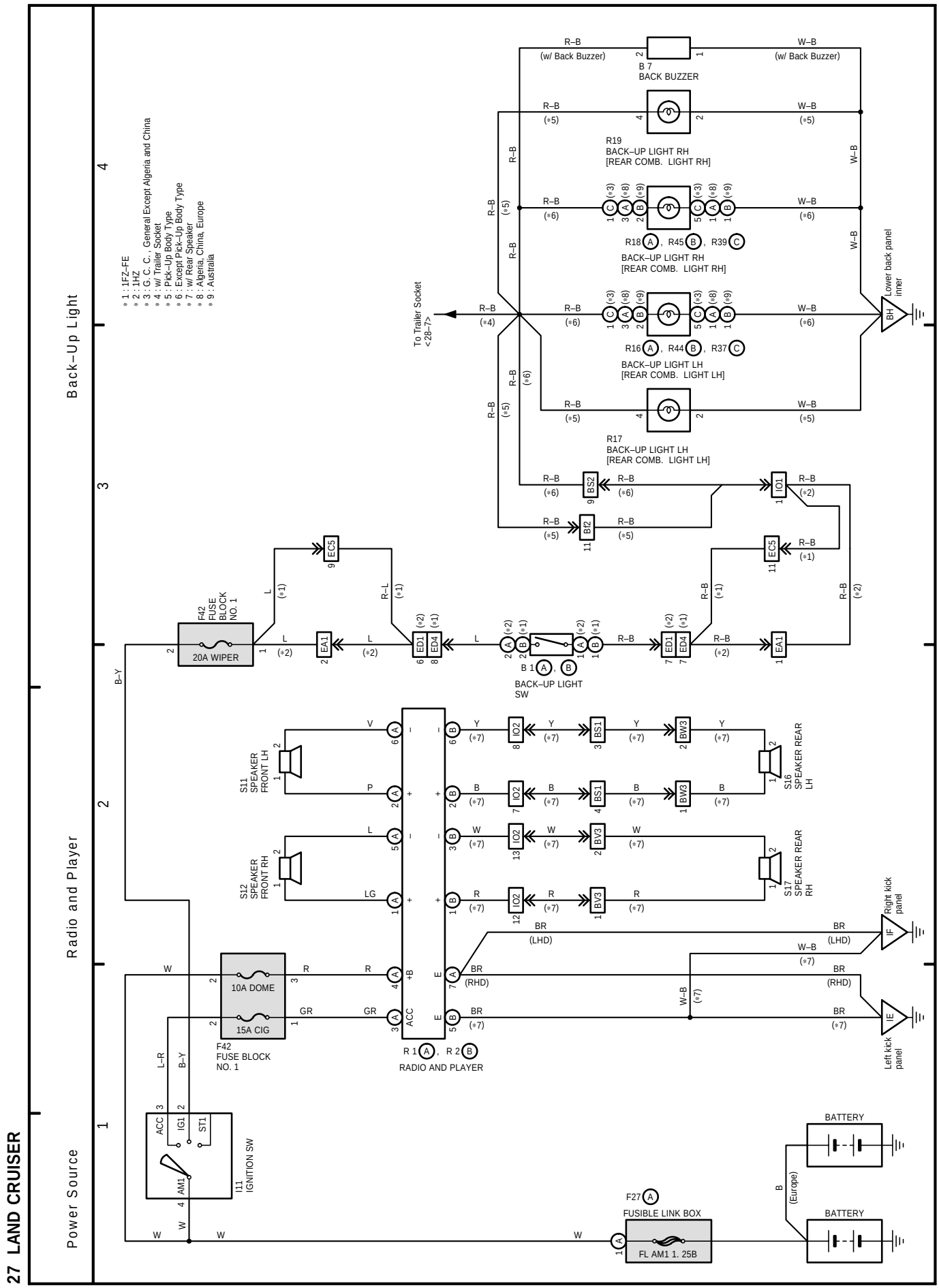
27 LAND CRUISER
Power Source
Radio and Player
Back–Up Light
1
2
3
4
* 1 : 1FZ–FE
* 2 : 1HZ
* 3 : G. C. C., General Except Algeria and China
* 4 : w/ Trailer Socket
* 5 : Pick–Up Body Type
* 6 : Except Pick–Up Body Type
* 7 : w/ Rear Speaker
* 8 : Algeria, China, Europe
* 9 : Australia
B 7
BACK BUZZER
(w/ Back Buzzer)
R19
BACK–UP LIGHT RH
[REAR COMB. LIGHT RH]
R18 A , R45 B , R39 C
BACK–UP LIGHT RH
[REAR COMB. LIGHT RH]
R16 A , R44 B , R37 C
BACK–UP LIGHT LH
[REAR COMB. LIGHT LH]
R17
BACK–UP LIGHT LH
[REAR COMB. LIGHT LH]
To Trailer Socket
<28–7>
Lower back panel inner
BH
F42
FUSE
BLOCK
NO. 1
20A WIPER
B 1 A , B
BACK–UP LIGHT
SW
S11
SPEAKER
FRONT LH
S12
SPEAKER
FRONT RH
S16
SPEAKER REAR
LH
S17
SPEAKER REAR
RH
Right kick panel
IF
IE
Left kick panel
10A DOME
15A CIG
F42
FUSE BLOCK
NO. 1
R 1 A , R 2 B
RADIO AND PLAYER
I11
IGNITION SW
ACC
IG1
ST1
AM1
F27 A
FUSIBLE LINK BOX
FL AM1 1. 25B
BATTERY
BATTERY
B
(Europe)