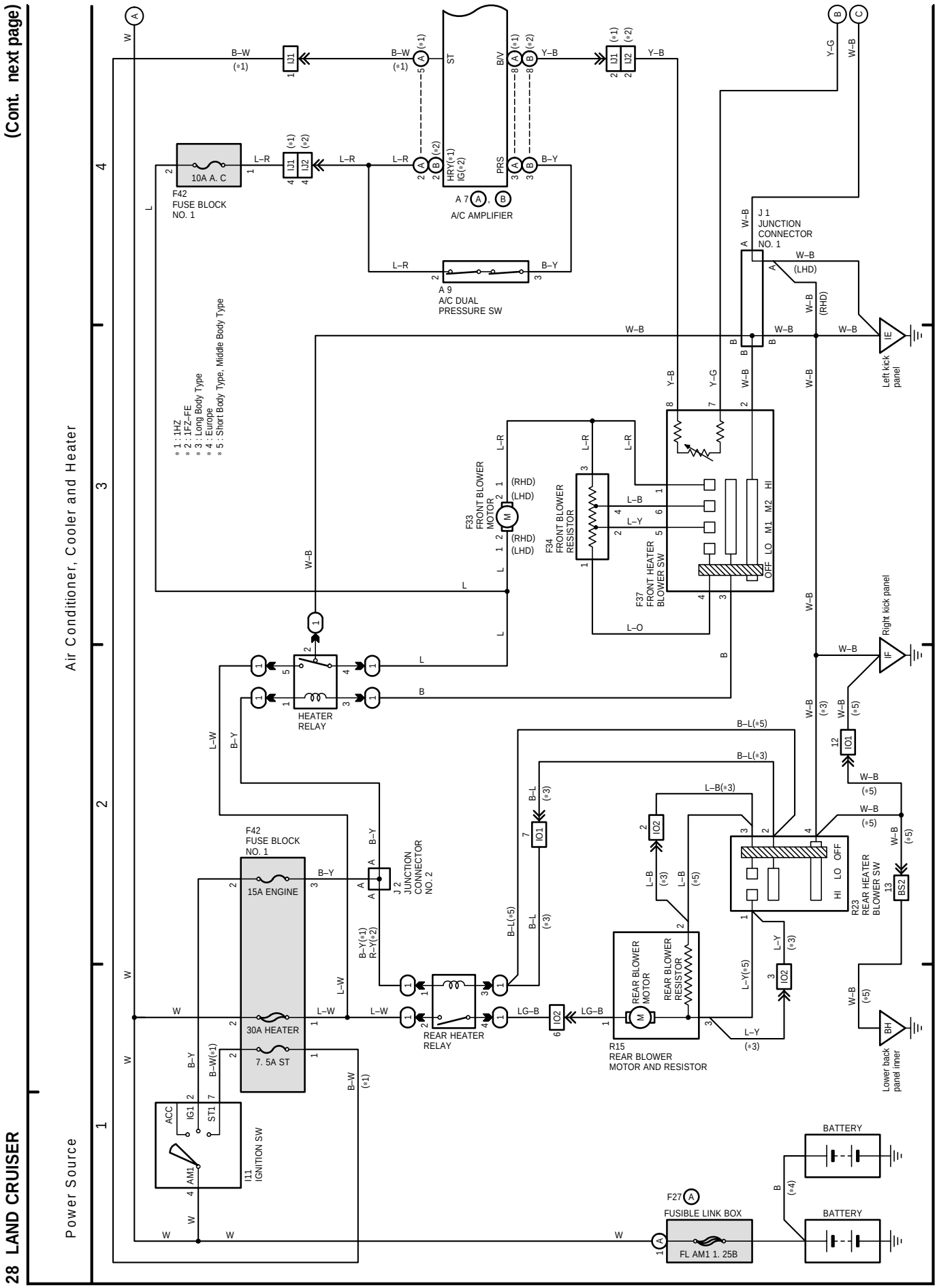
(Cont. next page)
28 LAND CRUISER
Power Source
Air Conditioner, Cooler and Heater
* 1 : 1HZ
* 2 : 1FZ-FE
* 3 : Long Body Type
* 4 : Europe
* 5 : Short Body Type, Middle Body Type
F42 FUSE BLOCK NO. 1
10A A. C
A 7 A/C AMPLIFIER
A 9 A/C DUAL PRESSURE SW
J 1 JUNCTION CONNECTOR NO. 1
Left kick panel
F33 FRONT BLOWER MOTOR
F34 FRONT BLOWER RESISTOR
F37 FRONT HEATER BLOWER SW
Right kick panel
HEATER RELAY
15A ENGINE
30A HEATER
7. 5A ST
J 2 JUNCTION CONNECTOR NO. 2
REAR HEATER RELAY
REAR BLOWER MOTOR
REAR BLOWER RESISTOR
R15 REAR BLOWER MOTOR AND RESISTOR
R23 REAR HEATER BLOWER SW
Lower back panel inner
I11 IGNITION SW
F27 FUSIBLE LINK BOX
FL AM1 1. 25B
BATTERY
BATTERY

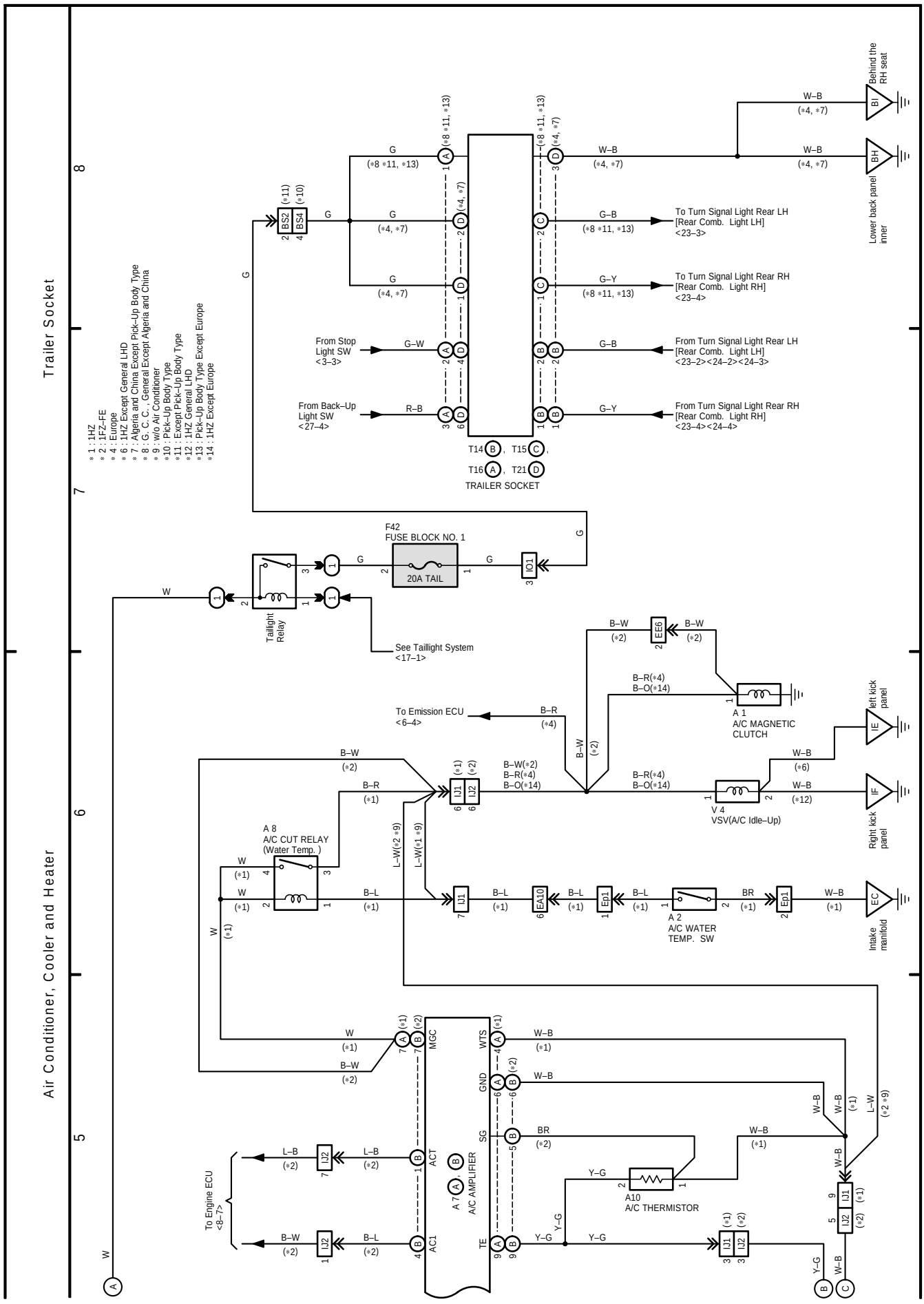
Trailer Socket
Air Conditioner, Cooler and Heater
* 1 : 1HZ
* 2 : 1FZ–FE
* 4 : Europe
* 6 : 1HZ Except General LHD
* 7 : Algeria and China Except Pick–Up Body Type
* 8 : G. C. C. , General Except Algeria and China
* 9 : w/o Air Conditioner
*10 : Pick–Up Body Type
*11 : Except Pick–Up Body Type
*12 : 1HZ General LHD
*13 : Pick–Up Body Type Except Europe
*14 : 1HZ Except Europe
Behind the RH seat
Lower back panel inner
To Turn Signal Light Rear LH [Rear Comb. Light LH] <23–3>
To Turn Signal Light Rear RH [Rear Comb. Light RH] <23–4>
From Stop Light SW <3–3>
From Back–Up Light SW <27–4>
From Turn Signal Light Rear LH [Rear Comb. Light LH] <23–2><24–2><24–3>
From Turn Signal Light Rear RH [Rear Comb. Light RH] <23–4><24–4>
T14 B , T15 C ,
T16 A , T21 D
TRAILER SOCKET
F42
FUSE BLOCK NO. 1
20A TAIL
Taillight Relay
See Taillight System <17–1>
To Emission ECU <6–4>
A 1
A/C MAGNETIC CLUTCH
left kick panel
A 8
A/C CUT RELAY (Water Temp.)
V 4
VSV(A/C Idle–Up)
Right kick panel
A 2
A/C WATER TEMP. SW
Intake manifold
A10
A/C THERMISTOR
A 7
A/C AMPLIFIER
To Engine ECU <8–7>
MGC
ACT
AC1
WTS
GND
SG
TE