(Cont. next page)

Power Source

Engine Control (1FZ–FE w/ Engine Immobiliser System)

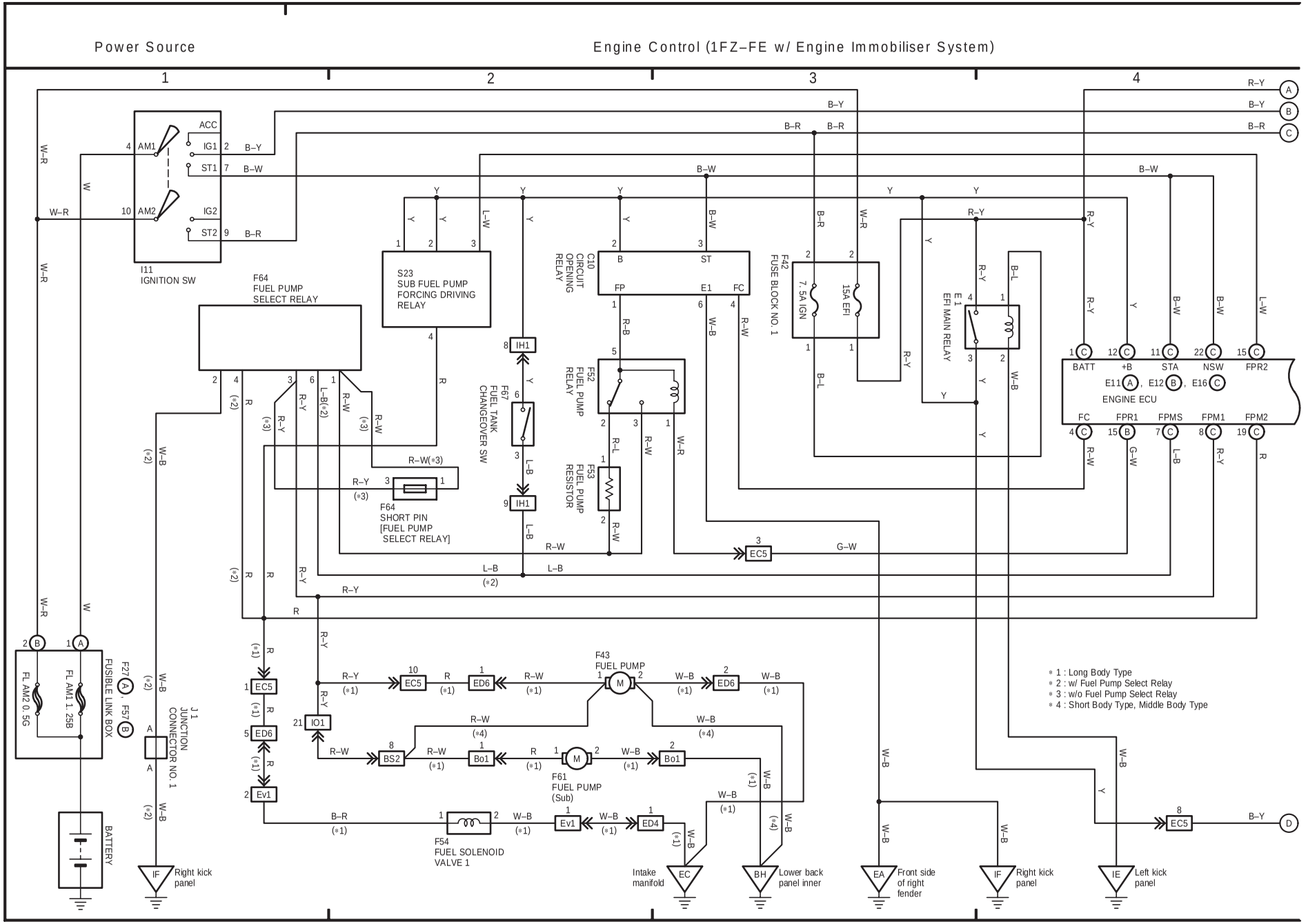

(Cont. next page)

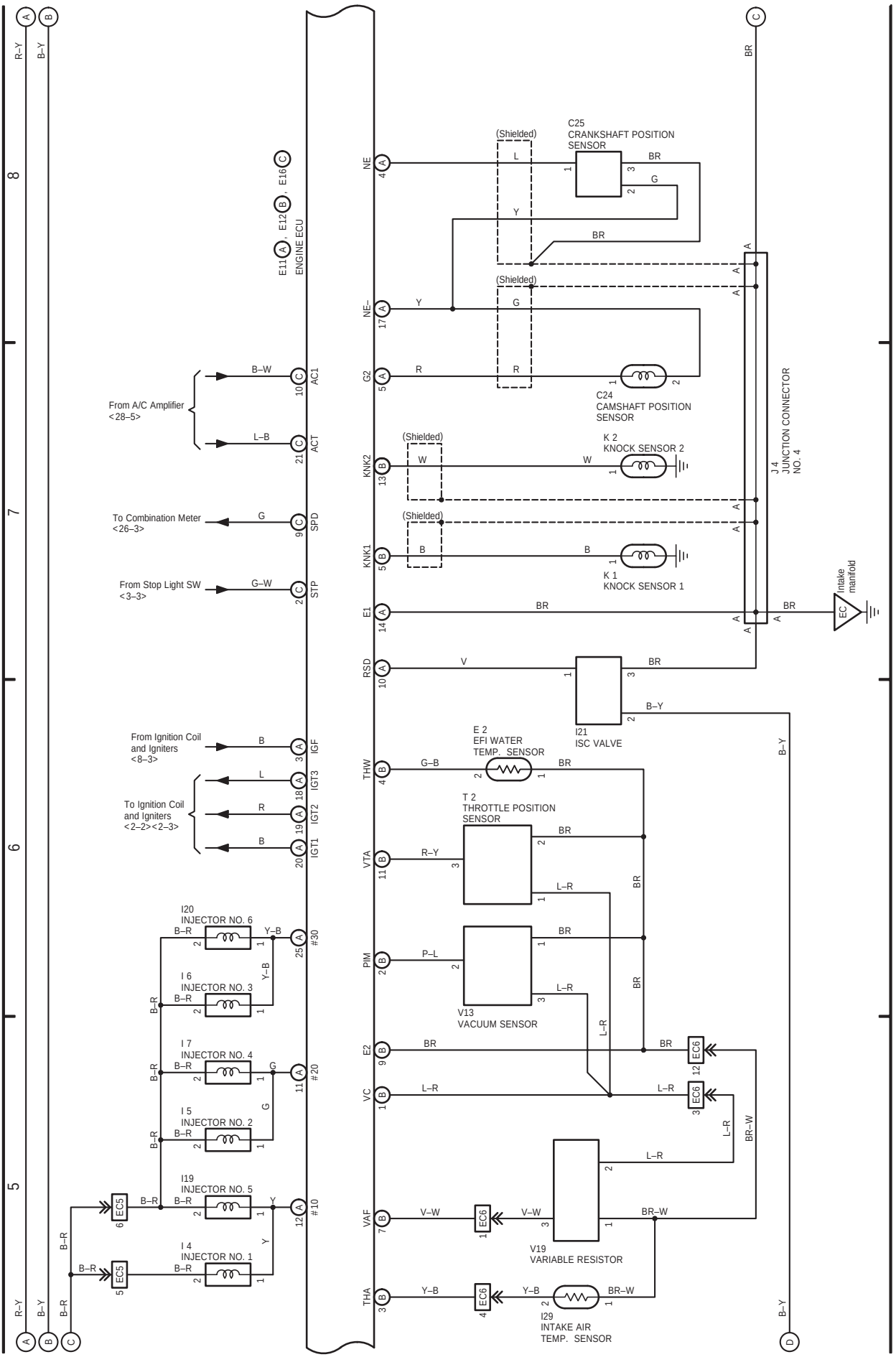

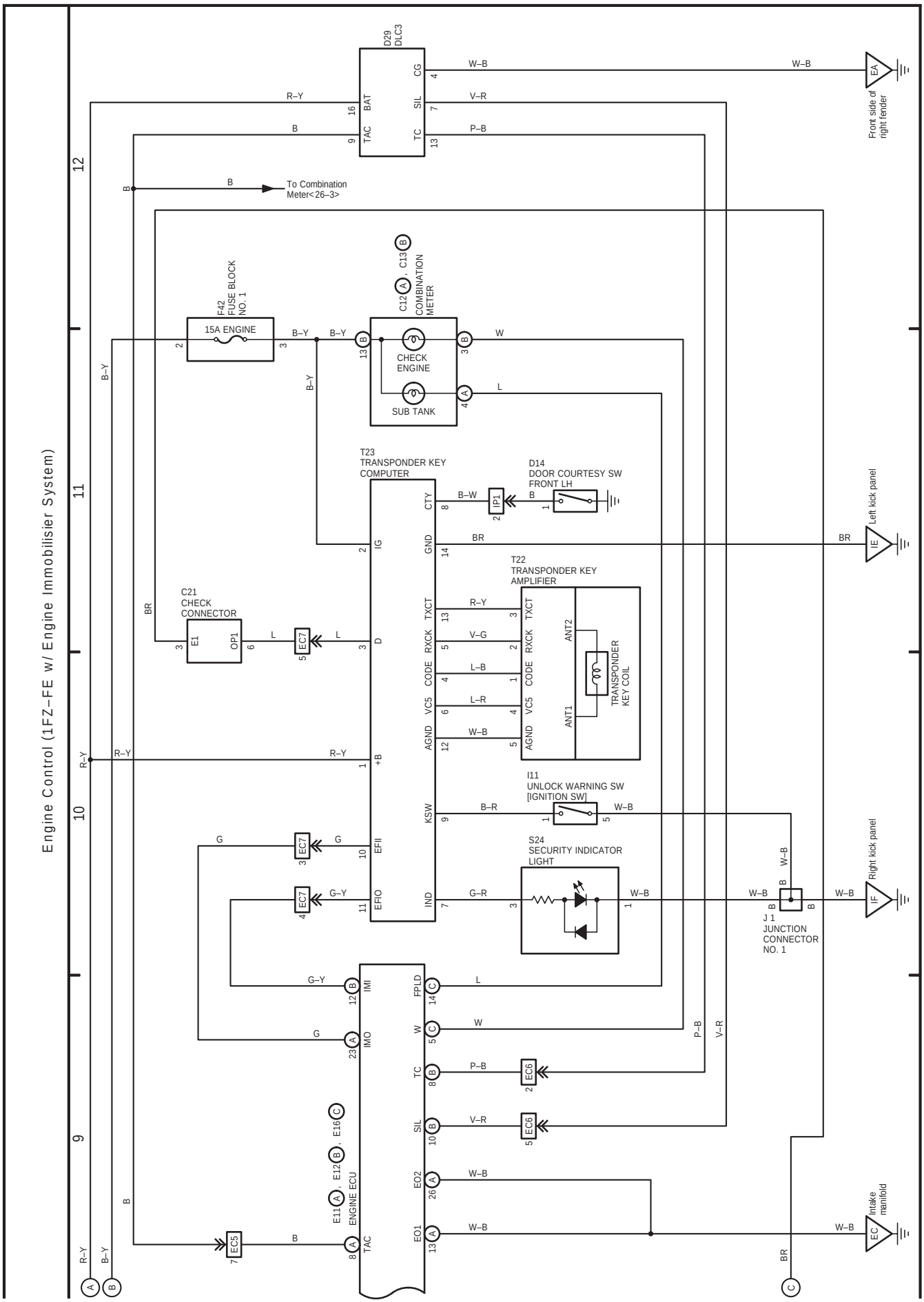
Engine Control (1FZ–FE w/ Engine Immobilisier System)
D29 DLC3
CG
SIL
TC
BAT
TAC
W–B
V–R
P–B
R–Y
B
To Combination Meter< 26–3>
Front side of right fender
EA
F42 FUSE BLOCK NO. 1
15A ENGINE
C12, C13 COMBINATION METER
CHECK ENGINE
SUB TANK
B–Y
W
L
T23 TRANSPONDER KEY COMPUTER
CTY
IG
GND
+B
D14 DOOR COURTESY SW FRONT LH
IP1
Left kick panel
IE
BR
T22 TRANSPONDER KEY AMPLIFIER
TXCT
RXCK
CODE
VC5
AGND
ANT2
ANT1
TRANSPONDER KEY COIL
C21 CHECK CONNECTOR
E1
OP1
EC7
D
R–Y
V–G
L–B
L–R
W–B
I11 UNLOCK WARNING SW [IGNITION SW]
KSW
B–R
S24 SECURITY INDICATOR LIGHT
EFII
EFIO
IND
G
G–Y
G–R
Right kick panel
IF
J 1 JUNCTION CONNECTOR NO. 1
E11, E12, E16 ENGINE ECU
IMI
IMO
FPLD
EC6
EC5
EO2
EO1
Intake manifold
EC
9
10
11
12