Position of Parts in Body

[RHD : Except Pick–Up]

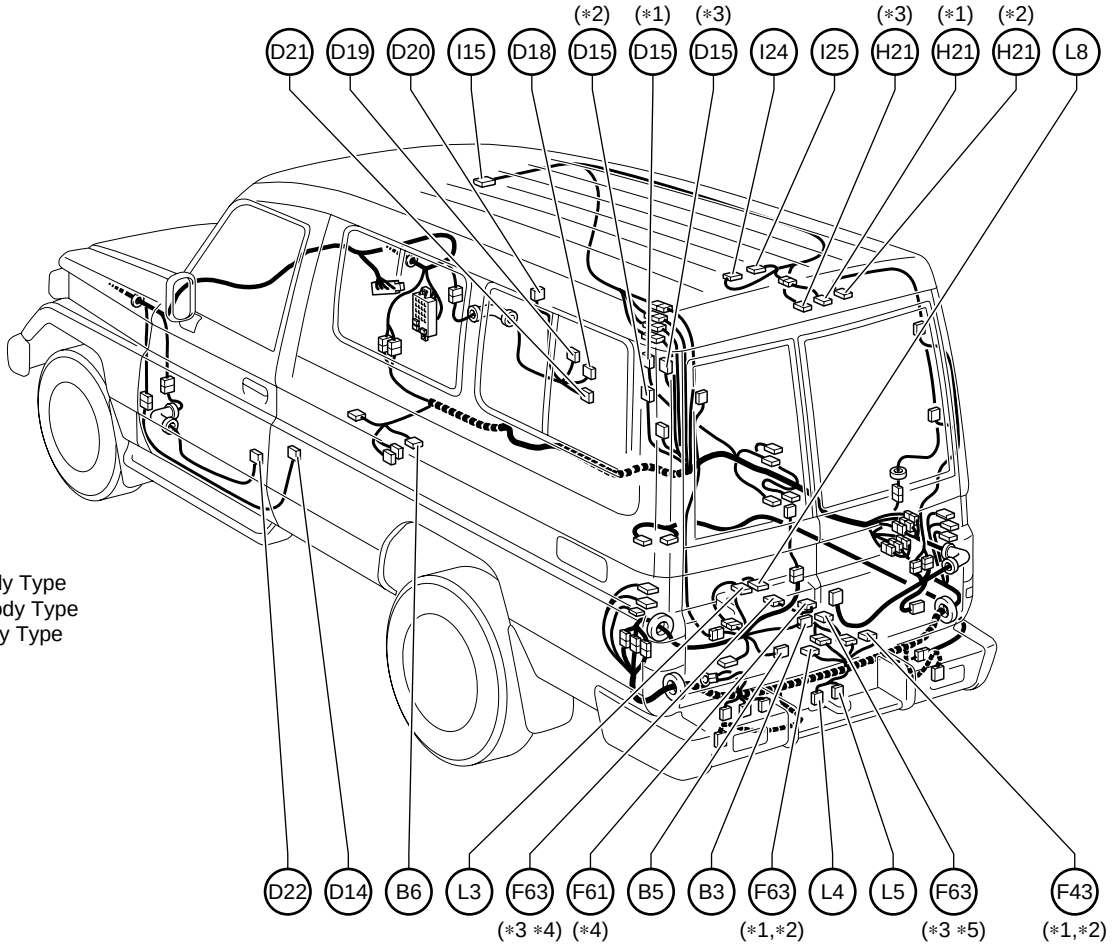

∗1:Shrot Body Type
∗2:Middle Body Type
∗3:Long Body Type
∗4:1FZ-FE
∗5:1HZ

B 3 Back Door Courtesy SW
B 5 Back Door Lock Motor
B 6 Buckle SW

D14 Door Courtesy SW Front LH
D15 Door Courtesy SW Front RH
D18 Door Key Lock and Unlock SW (Driver's Side)
D19 Door Lock Control Relay
D20 Door Lock Control SW
D21 Door Lock Motor (Driver's Side)
D22 Door Lock Motor (Front Passenger's Side)

F 43 Fuel Pump
F 61 Fuel Pump (Sub)
F 63 Fuel Sender (Rear)

H21 High Mounted Stop Light

I 15 Interior Light Front
I 24 Interior Light Rear
I 25 Interior Light Rear

L 3 License Plate Light
L 4 License Plate Light LH
L 5 License Plate Light RH
L 8 License Plate Light