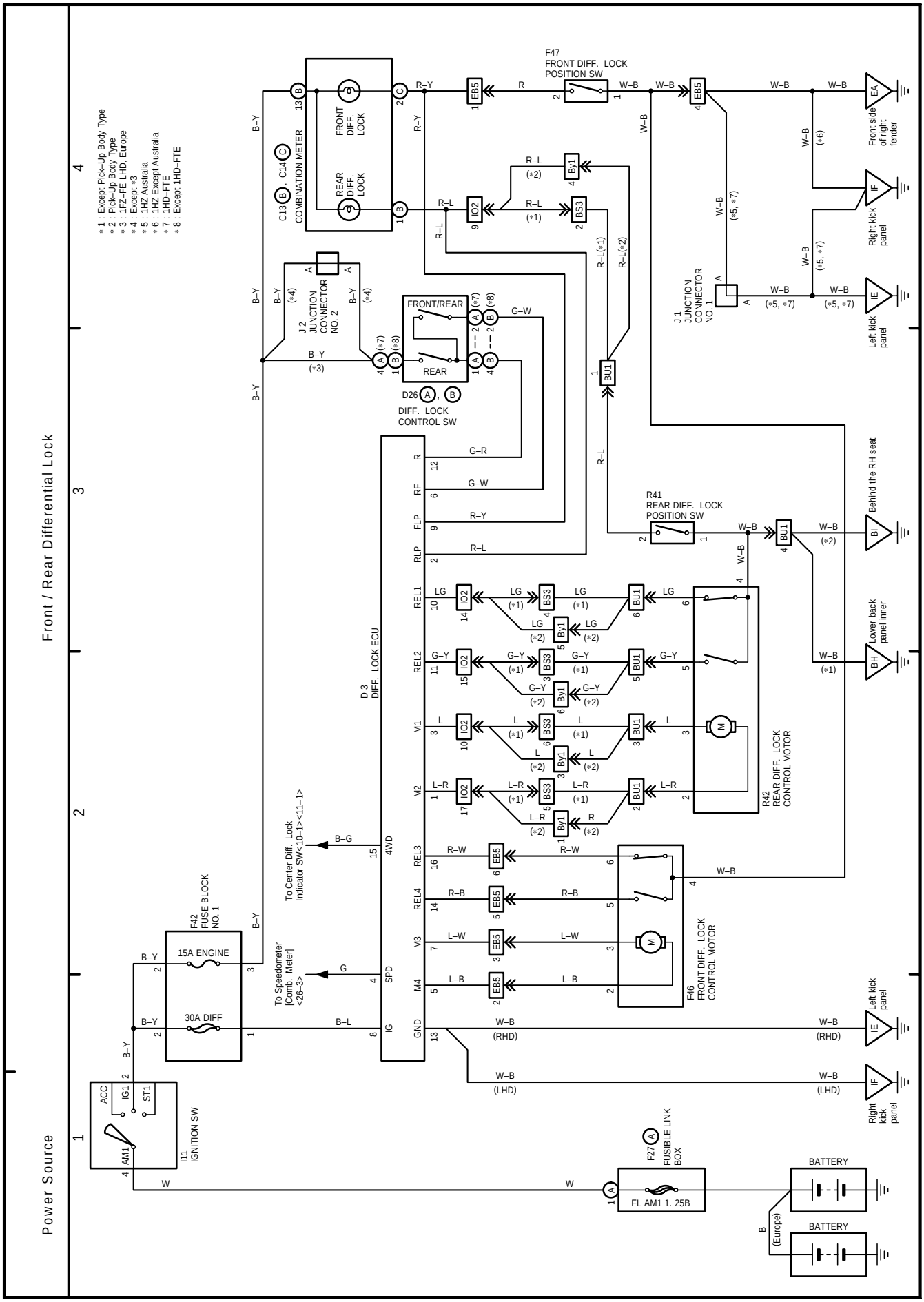
Power Source
Front / Rear Differential Lock
* 1 : Except Pick–Up Body Type
* 2 : Pick–Up Body Type
* 3 : 1FZ–FE LHD, Europe
* 4 : Except *3
* 5 : 1HZ Australia
* 6 : 1HZ Except Australia
* 7 : 1HD–FTE
* 8 : Except 1HD–FTE
I11 IGNITION SW
ACC
IG1
ST1
AM1
F42 FUSE BLOCK NO. 1
15A ENGINE
30A DIFF
F27 FUSIBLE LINK BOX
FL AM1 1. 25B
BATTERY
BATTERY
B (Europe)
C13 (B), C14 (C) COMBINATION METER
FRONT DIFF. LOCK
REAR DIFF. LOCK
F47 FRONT DIFF. LOCK POSITION SW
J 2 JUNCTION CONNECTOR NO. 2
FRONT/REAR
REAR
D26 (A), (B) DIFF. LOCK CONTROL SW
J 1 JUNCTION CONNECTOR NO. 1
R41 REAR DIFF. LOCK POSITION SW
D 3 DIFF. LOCK ECU
R42 REAR DIFF. LOCK CONTROL MOTOR
F46 FRONT DIFF. LOCK CONTROL MOTOR
To Center Diff. Lock Indicator SW<10–1><11–1>
To Speedometer [Comb. Meter] <26–3>
Front side of right fender
Right kick panel
Left kick panel
Behind the RH seat
Lower back panel inner
Left kick panel
Right kick panel
(RHD)
(LHD)