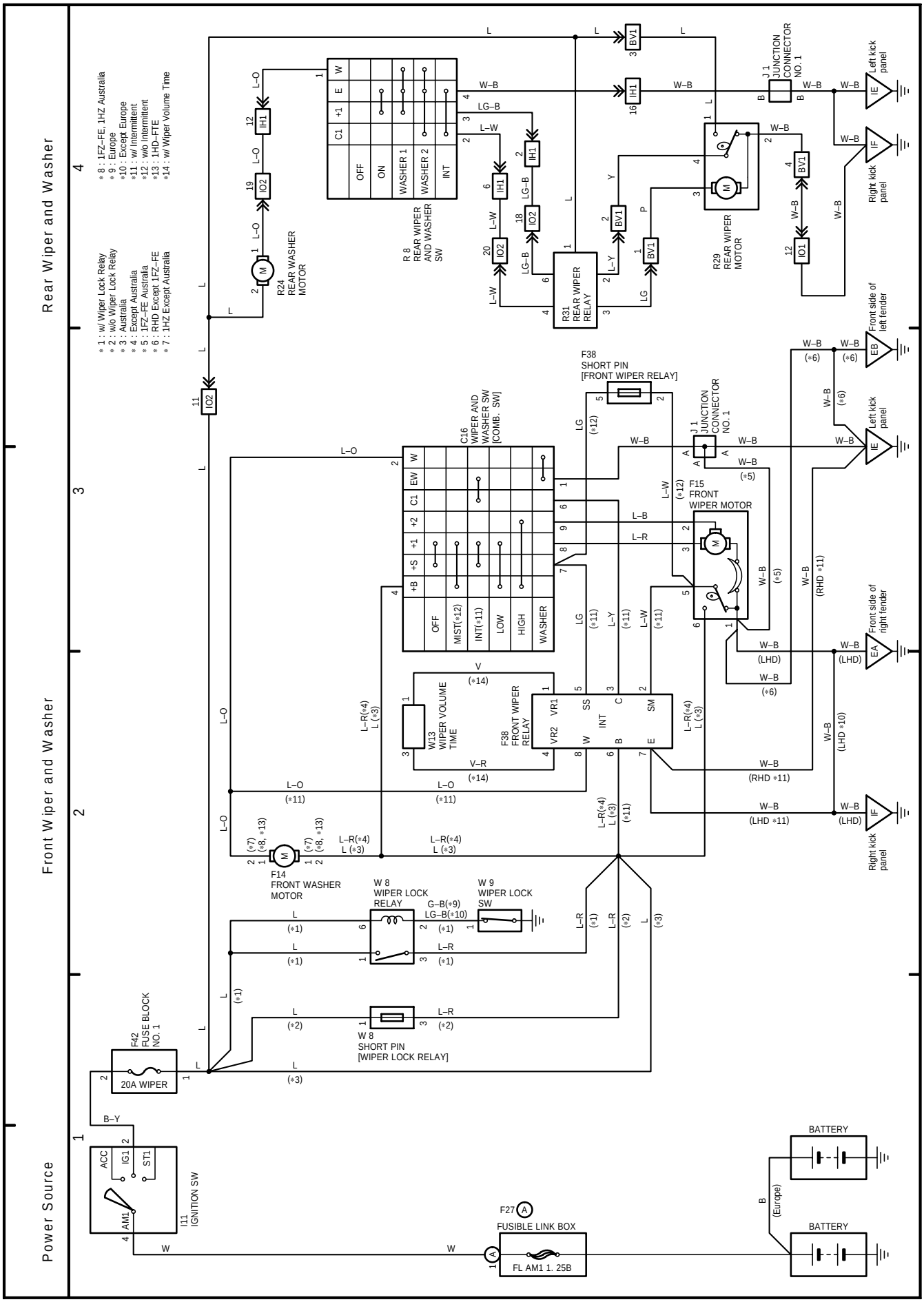
Power Source
Front Wiper and Washer
Rear Wiper and Washer
* 1 : w/ Wiper Lock Relay
* 2 : w/o Wiper Lock Relay
* 3 : Australia
* 4 : Except Australia
* 5 : 1FZ–FE Australia
* 6 : RHD Except 1FZ–FE
* 7 : 1HZ Except Australia
* 8 : 1FZ–FE, 1HZ Australia
* 9 : Europe
*10 : Except Europe
*11 : w/ Intermittent
*12 : w/o Intermittent
*13 : 1HD–FTE
*14 : w/ Wiper Volume Time
BATTERY
B (Europe)
F27 FUSIBLE LINK BOX
FL AM1 1. 25B
I11 IGNITION SW
ACC
IG1
ST1
AM1
F42 FUSE BLOCK NO. 1
20A WIPER
B–Y
W 8 SHORT PIN [WIPER LOCK RELAY]
W 8 WIPER LOCK RELAY
W 9 WIPER LOCK SW
F14 FRONT WASHER MOTOR
W13 WIPER VOLUME TIME
F38 FRONT WIPER RELAY
VR1
VR2
SS
INT
SM
C16 WIPER AND WASHER SW [COMB. SW]
OFF
MIST(*12)
INT(*11)
LOW
HIGH
WASHER
F15 FRONT WIPER MOTOR
F38 SHORT PIN [FRONT WIPER RELAY]
R24 REAR WASHER MOTOR
R 8 REAR WIPER AND WASHER SW
R21 REAR WIPER RELAY
R29 REAR WIPER MOTOR
J 1 JUNCTION CONNECTOR NO. 1
Left kick panel
Right kick panel
Front side of left fender
Front side of right fender
OFF
ON
WASHER 1
WASHER 2
INT