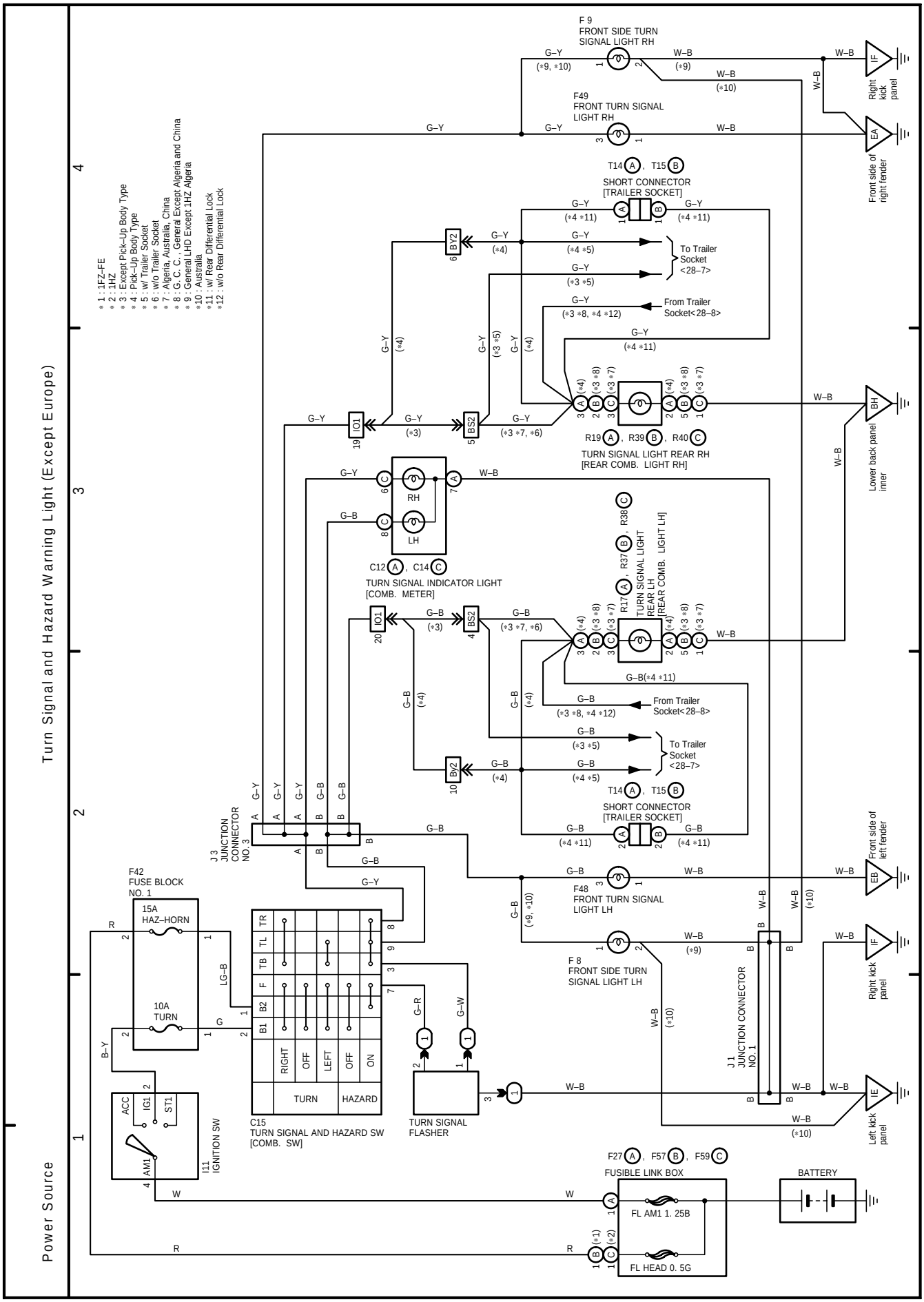
Power Source
Turn Signal and Hazard Warning Light (Except Europe)
* 1 : 1FZ–FE
* 2 : 1HZ
* 3 : Except Pick–Up Body Type
* 4 : Pick–Up Body Type
* 5 : w/ Trailer Socket
* 6 : w/o Trailer Socket
* 7 : Algeria, Australia, China
* 8 : G. C. C., General Except Algeria and China
* 9 : General LHD Except 1HZ Algeria
*10 : Australia
*11 : w/ Rear Differential Lock
*12 : w/o Rear Differential Lock
F 9
FRONT SIDE TURN SIGNAL LIGHT RH
F49
FRONT TURN SIGNAL LIGHT RH
T14 A , T15 B
SHORT CONNECTOR [TRAILER SOCKET]
To Trailer Socket <28–7>
From Trailer Socket<28–8>
R19 A , R39 B , R40 C
TURN SIGNAL LIGHT REAR RH [REAR COMB. LIGHT RH]
C12 A , C14 C
TURN SIGNAL INDICATOR LIGHT [COMB. METER]
R17 A , R37 B , R38 C
TURN SIGNAL LIGHT REAR LH [REAR COMB. LIGHT LH]
J 3
JUNCTION CONNECTOR NO. 3
F42
FUSE BLOCK NO. 1
15A HAZ–HORN
10A TURN
C15
TURN SIGNAL AND HAZARD SW [COMB. SW]
TURN SIGNAL FLASHER
I11
IGNITION SW
F48
FRONT TURN SIGNAL LIGHT LH
F 8
FRONT SIDE TURN SIGNAL LIGHT LH
J 1
JUNCTION CONNECTOR NO. 1
F27 A , F57 B , F59 C
FUSIBLE LINK BOX
FL AM1 1. 25B
FL HEAD 0. 5G
BATTERY
Right kick panel
Front side of right fender
Lower back panel inner
Front side of left fender
Left kick panel