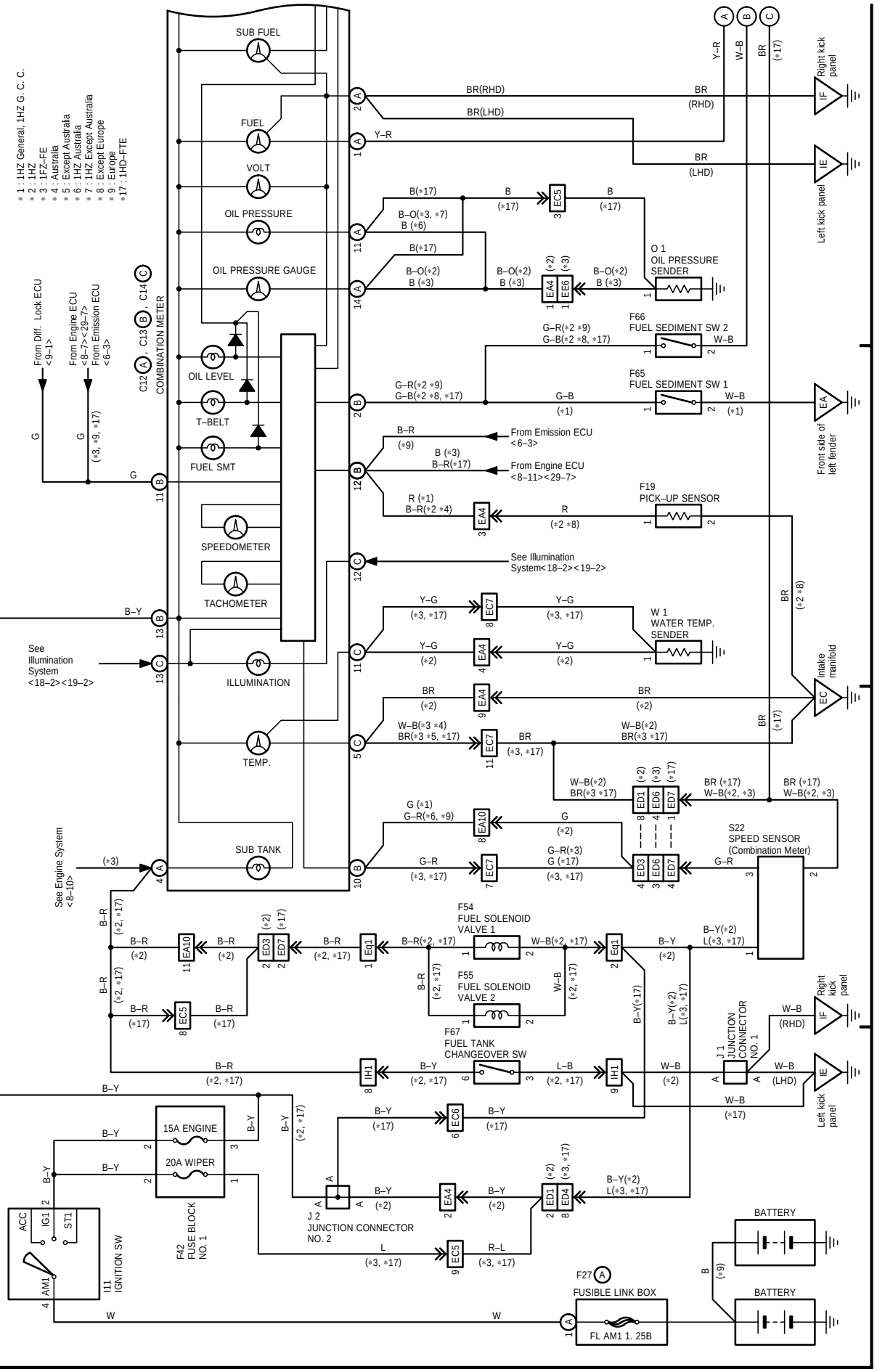
Power Source
Combination Meter
(Cont. next page)
* 1 : 1HZ General, 1HZ G. C. C.
* 2 : 1HZ
* 3 : 1FZ–FE
* 4 : Australia
* 5 : Except Australia
* 6 : 1HZ Australia
* 7 : 1HZ Except Australia
* 8 : Except Europe
* 9 : Europe
*17 : 1HD–FTE
SUB FUEL
FUEL
VOLT
OIL PRESSURE
OIL PRESSURE GAUGE
OIL LEVEL
T–BELT
FUEL SMT
SPEEDOMETER
TACHOMETER
ILLUMINATION
TEMP.
SUB TANK
C12 (A), C13 (B), C14 (C)
COMBINATION METER
From Diff. Lock ECU <9–1>
From Engine ECU <8–7><29–7>
From Emission ECU <6–3>
See Illumination System <18–2><19–2>
See Engine System <8–10>
BR(RHD)
BR(LHD)
Y–R
B(*17)
B–O(*3, *7)
B (*6)
B–O(*2)
B (*3)
O 1
OIL PRESSURE SENDER
F66
FUEL SEDIMENT SW 2
F65
FUEL SEDIMENT SW 1
G–R(*2 *9)
G–B(*2 *8, *17)
B–R
B (*3)
B–R(*17)
From Emission ECU <6–3>
From Engine ECU <8–11><29–7>
R (*1)
B–R(*2 *4)
F19
PICK–UP SENSOR
See Illumination System< 18–2><19–2>
W 1
WATER TEMP. SENDER
W–B(*3 *4)
BR(*3 *5, *17)
W–B(*2)
BR(*3 *17)
G (*1)
G–R(*6, *9)
G–R(*3)
G (*17)
S22
SPEED SENSOR
(Combination Meter)
F54
FUEL SOLENOID VALVE 1
F55
FUEL SOLENOID VALVE 2
F67
FUEL TANK CHANGEOVER SW
J 1
JUNCTION CONNECTOR NO. 1
J 2
JUNCTION CONNECTOR NO. 2
F42
FUSE BLOCK NO. 1
15A ENGINE
20A WIPER
I11
IGNITION SW
ACC
IG1
ST1
AM1
F27
FUSIBLE LINK BOX
FL AM1 1. 25B
BATTERY
Right kick panel
Left kick panel
Front side of left fender
Intake manifold

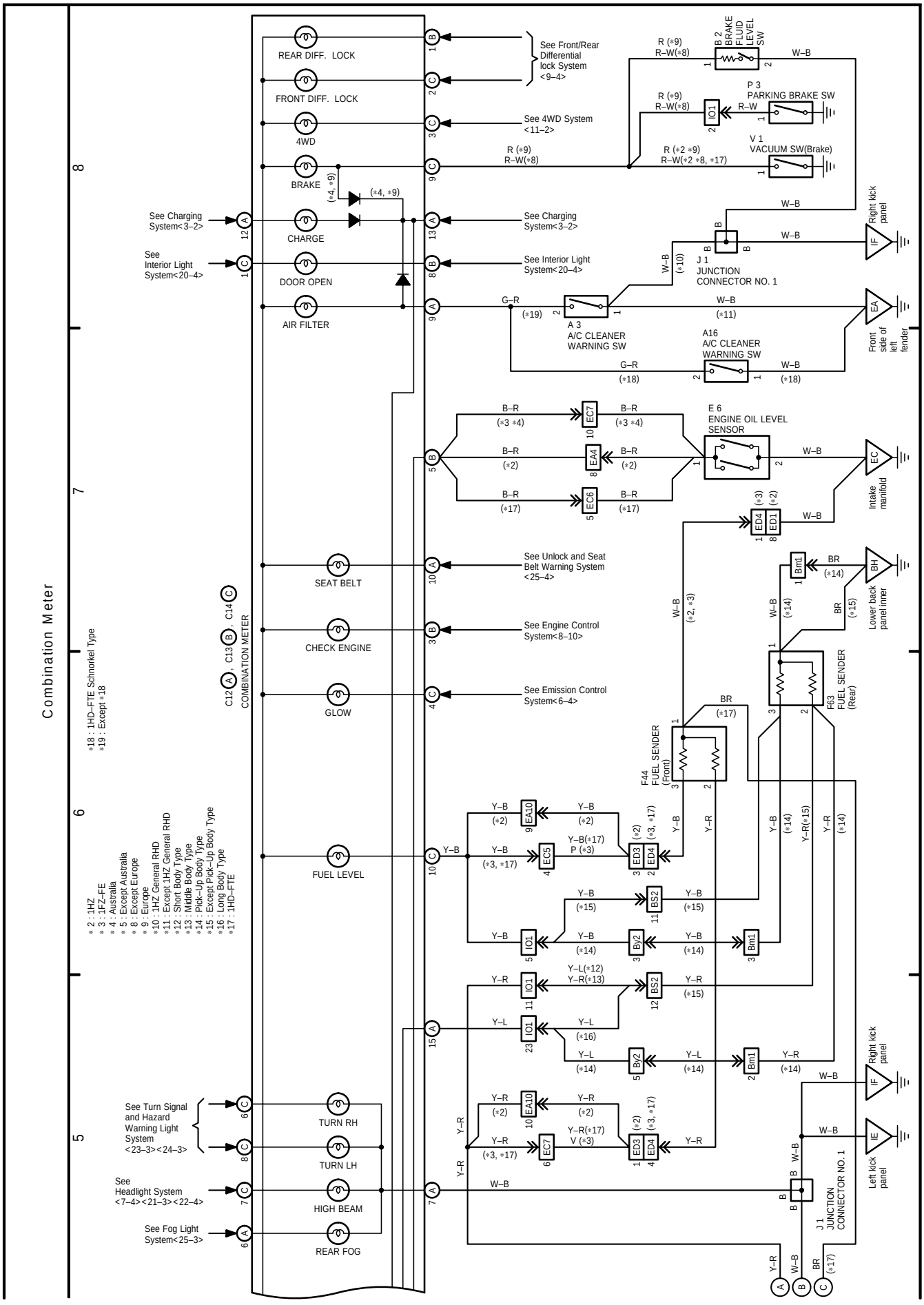
Combination Meter
*18 : 1HD–FTE Schnorkel Type
*19 : Except *18
* 2 : 1HZ
* 3 : 1FZ–FE
* 4 : Australia
* 5 : Except Australia
* 8 : Except Europe
* 9 : Europe
*10 : 1HZ General RHD
*11 : Except 1HZ General RHD
*12 : Short Body Type
*13 : Middle Body Type
*14 : Pick–Up Body Type
*15 : Except Pick–Up Body Type
*16 : Long Body Type
*17 : 1HD–FTE
C12 (A), C13 (B), C14 (C)
COMBINATION METER
REAR DIFF. LOCK
FRONT DIFF. LOCK
4WD
BRAKE
CHARGE
DOOR OPEN
AIR FILTER
SEAT BELT
CHECK ENGINE
GLOW
FUEL LEVEL
TURN RH
TURN LH
HIGH BEAM
REAR FOG
See Front/Rear Differential lock System <9–4>
See 4WD System <11–2>
See Charging System<3–2>
See Interior Light System<20–4>
See Unlock and Seat Belt Warning System <25–4>
See Engine Control System<8–10>
See Emission Control System<6–4>
See Turn Signal and Hazard Warning Light System <23–3><24–3>
See Headlight System <7–4><21–3><22–4>
See Fog Light System<25–3>
B 2 BRAKE FLUID LEVEL SW
P 3 PARKING BRAKE SW
V 1 VACUUM SW(Brake)
J 1 JUNCTION CONNECTOR NO. 1
A 3 A/C CLEANER WARNING SW
A16 A/C CLEANER WARNING SW
E 6 ENGINE OIL LEVEL SENSOR
F44 FUEL SENDER (Front)
F63 FUEL SENDER (Rear)
J 1 JUNCTION CONNECTOR NO. 1
Right kick panel
Front side of left fender
Intake manifold
Lower back panel inner
Left kick panel