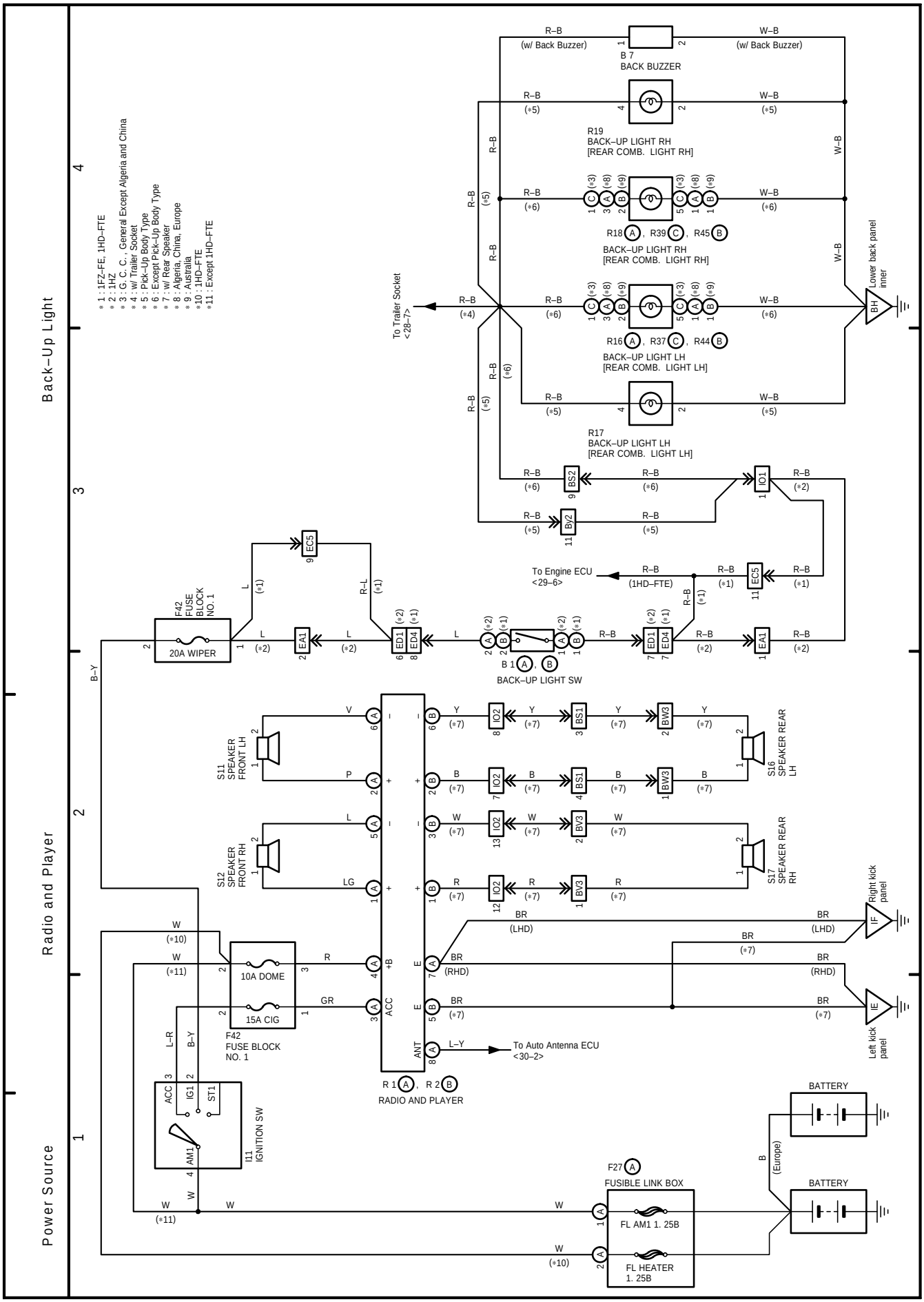
Power Source
Radio and Player
Back–Up Light
1
2
3
4
* 1 : 1FZ–FE, 1HD–FTE
* 2 : 1HZ
* 3 : G, C, , General Except Algeria and China
* 4 : w/ Trailer Socket
* 5 : Pick–Up Body Type
* 6 : Except Pick–Up Body Type
* 7 : w/ Rear Speaker
* 8 : Algeria, China, Europe
* 9 : Australia
*10 : 1HD–FTE
*11 : Except 1HD–FTE
B 7
BACK BUZZER
(w/ Back Buzzer)
R19
BACK–UP LIGHT RH
[REAR COMB. LIGHT RH]
R18 A , R39 C , R45 B
BACK–UP LIGHT RH
[REAR COMB. LIGHT RH]
R16 A , R37 C , R44 B
BACK–UP LIGHT LH
[REAR COMB. LIGHT LH]
R17
BACK–UP LIGHT LH
[REAR COMB. LIGHT LH]
To Trailer Socket
<28–7>
Lower back panel inner
BH
To Engine ECU
<29–6>
(1HD–FTE)
F42
FUSE
BLOCK
NO. 1
20A WIPER
B 1 A , B
BACK–UP LIGHT SW
S11
SPEAKER
FRONT LH
S12
SPEAKER
FRONT RH
S16
SPEAKER REAR
LH
S17
SPEAKER REAR
RH
10A DOME
15A CIG
F42
FUSE BLOCK
NO. 1
R 1 A , R 2 B
RADIO AND PLAYER
To Auto Antenna ECU
<30–2>
Right kick panel
IF
Left kick panel
IE
I11
IGNITION SW
ACC
IG1
ST1
AM1
F27 A
FUSIBLE LINK BOX
FL AM1 1. 25B
FL HEATER
1. 25B
BATTERY
BATTERY
B
(Europe)