(Cont. next page)

Power Source

Air Conditioner, Cooler and Heater

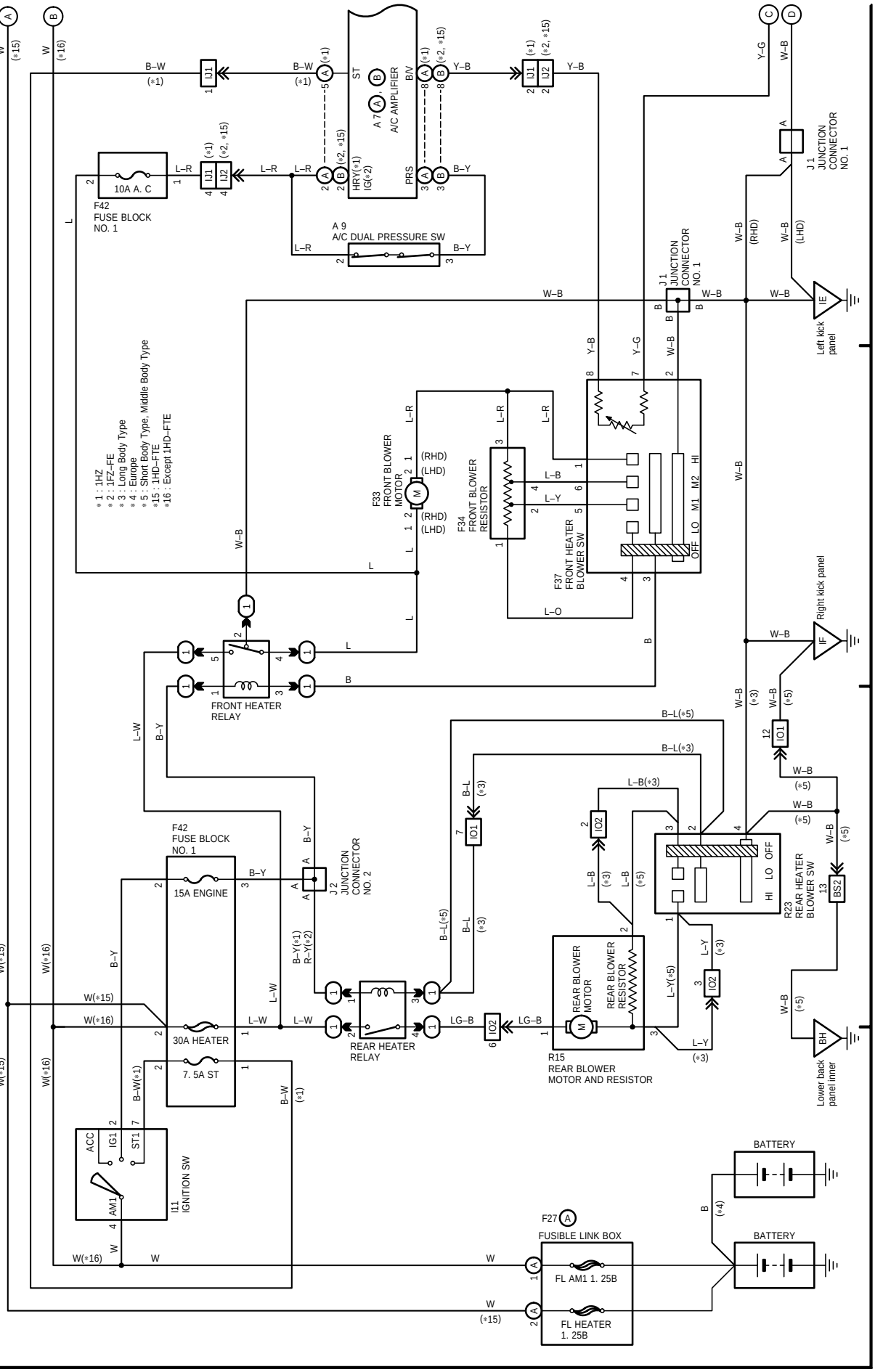

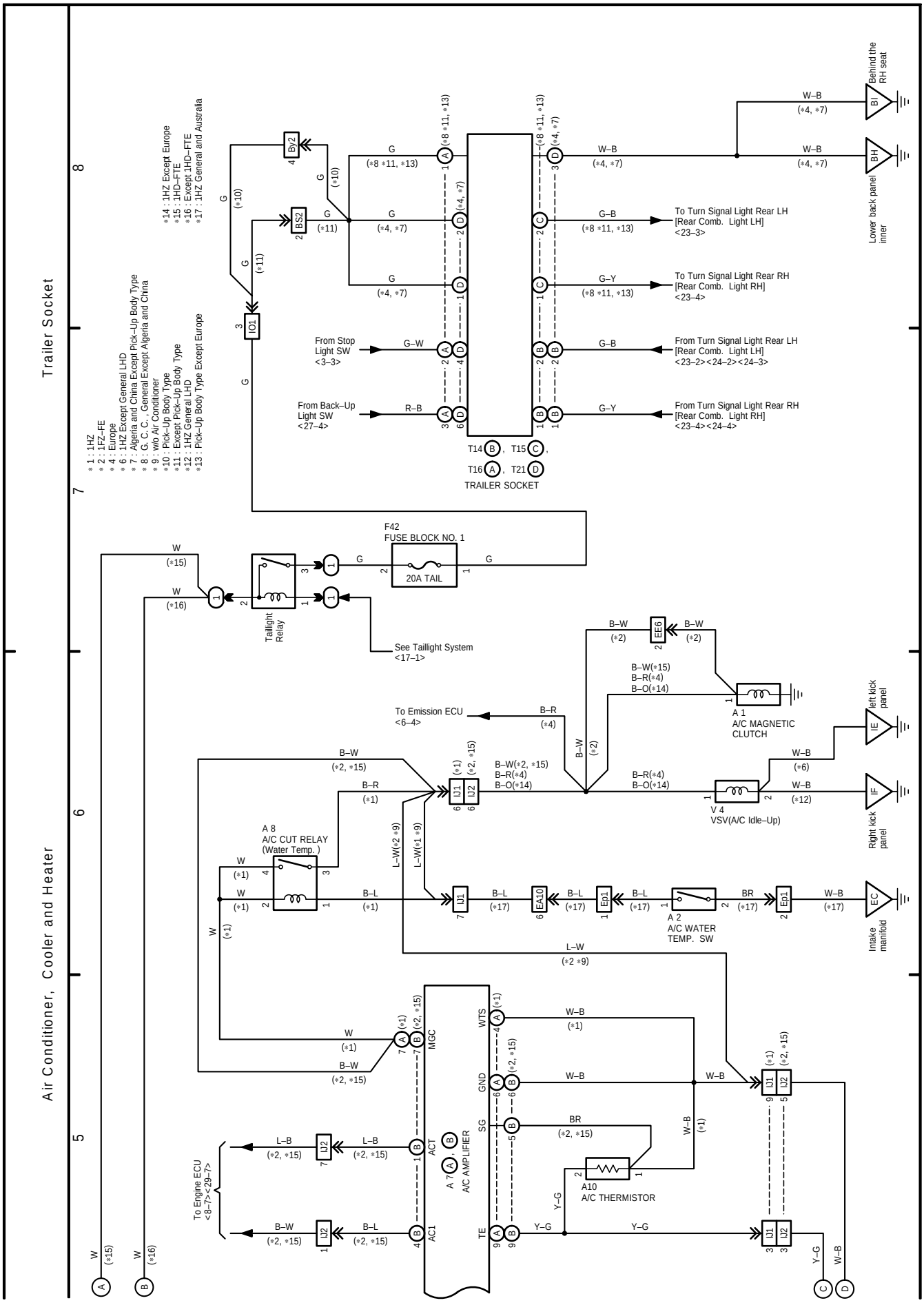
Air Conditioner, Cooler and Heater
Trailer Socket
5
6
7
8
*1 : 1HZ
*2 : 1FZ–FE
*4 : Europe
*6 : 1HZ Except General LHD
*7 : Algeria and China Except Pick–Up Body Type
*8 : G. C. C. , General Except Algeria and China
*9 : w/o Air Conditioner
*10 : Pick–Up Body Type
*11 : Except Pick–Up Body Type
*12 : 1HZ General LHD
*13 : Pick–Up Body Type Except Europe
*14 : 1HZ Except Europe
*15 : 1HD–FTE
*16 : Except 1HD–FTE
*17 : 1HZ General and Australia
T14 (B), T15 (C),
T16 (A), T21 (D)
TRAILER SOCKET
From Stop Light SW <3–3>
From Back–Up Light SW <27–4>
To Turn Signal Light Rear LH [Rear Comb. Light LH] <23–3>
To Turn Signal Light Rear RH [Rear Comb. Light RH] <23–4>
From Turn Signal Light Rear LH [Rear Comb. Light LH] <23–2><24–2><24–3>
From Turn Signal Light Rear RH [Rear Comb. Light RH] <23–4><24–4>
Behind the RH seat
Lower back panel inner
F42
FUSE BLOCK NO. 1
20A TAIL
Taillight Relay
See Taillight System <17–1>
To Emission ECU <6–4>
A 1
A/C MAGNETIC CLUTCH
A 2
A/C WATER TEMP. SW
A 8
A/C CUT RELAY (Water Temp.)
V 4
VSV(A/C Idle–Up)
A 7
A/C AMPLIFIER
A10
A/C THERMISTOR
To Engine ECU <8–7><29–7>
Left kick panel
Right kick panel
Intake manifold