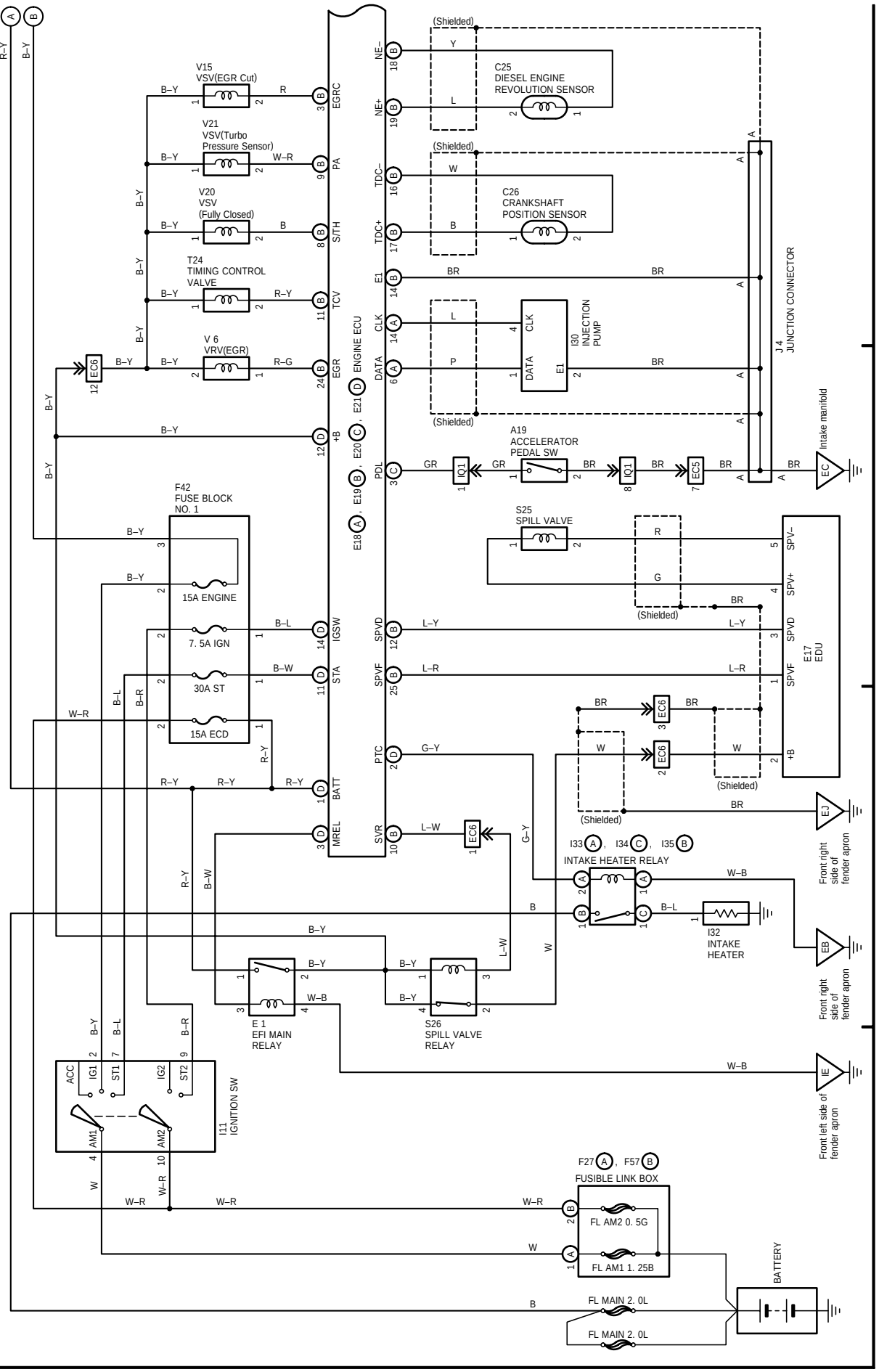
Power Source
Engine Control (1HD–FTE)
(Cont. next page)
V15
VSV(EGR Cut)
V21
VSV(Turbo
Pressure Sensor)
V20
VSV
(Fully Closed)
T24
TIMING CONTROL
VALVE
V 6
VRV(EGR)
C25
DIESEL ENGINE
REVOLUTION SENSOR
C26
CRANKSHAFT
POSITION SENSOR
ENGINE ECU
I30
INJECTION
PUMP
J 4
JUNCTION CONNECTOR
A19
ACCELERATOR
PEDAL SW
Intake manifold
F42
FUSE BLOCK
NO. 1
15A ENGINE
7. 5A IGN
30A ST
15A ECD
S25
SPILL VALVE
E17
EDU
INTAKE HEATER RELAY
I32
INTAKE
HEATER
E 1
EFI MAIN
RELAY
S26
SPILL VALVE
RELAY
I11
IGNITION SW
F27 , F57
FUSIBLE LINK BOX
FL AM2 0. 5G
FL AM1 1. 25B
FL MAIN 2. 0L
FL MAIN 2. 0L
BATTERY
Front right
side of
fender apron
Front right
side of
fender apron
Front left side of
fender apron

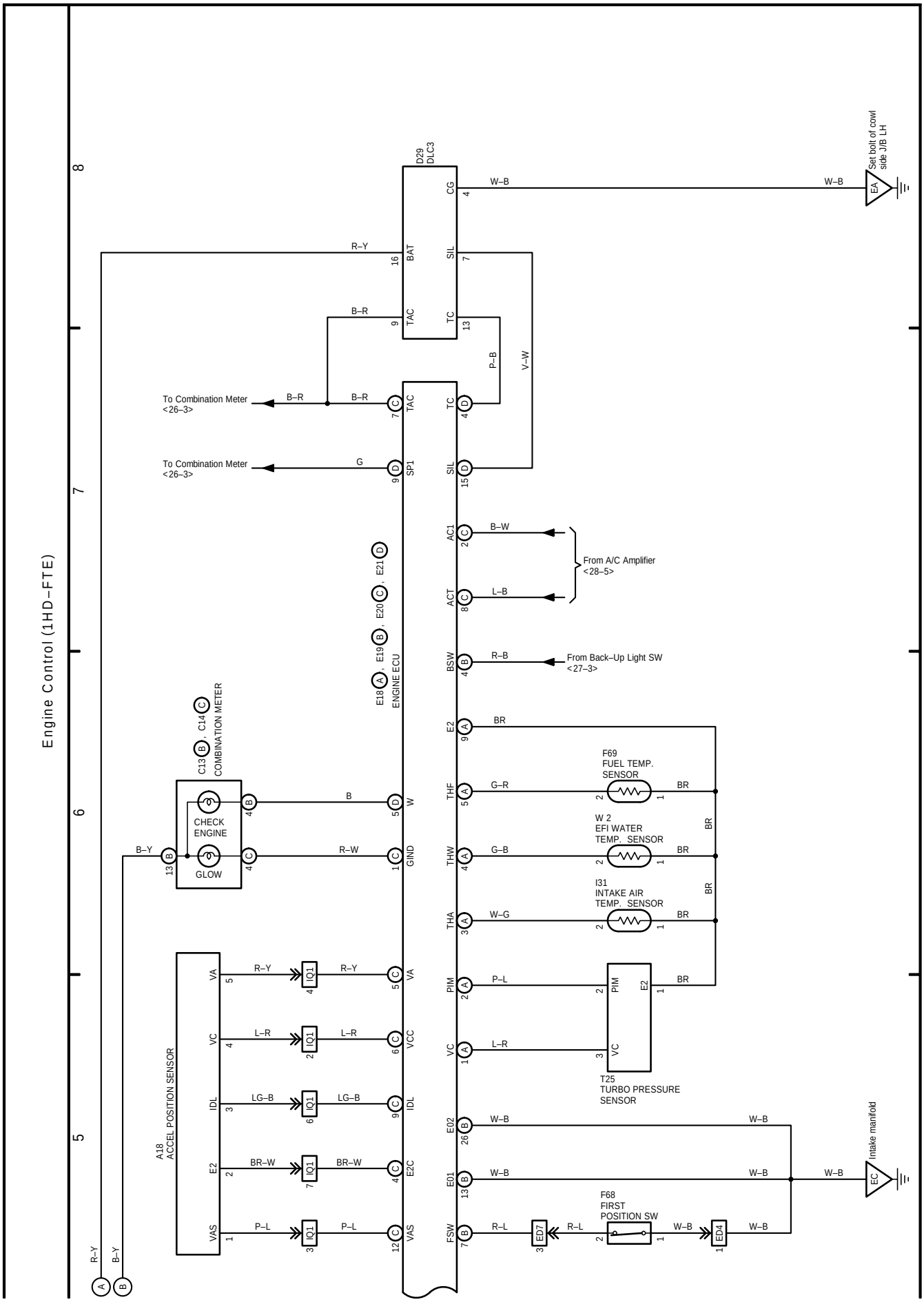
Engine Control (1HD–FTE)
5
6
7
8
D29
DLC3
CG
BAT
SIL
TAC
TC
W–B
R–Y
B–R
P–B
V–W
Set bolt of cowl side J/B LH
EA
To Combination Meter <26–3>
To Combination Meter <26–3>
G
SP1
AC1
ACT
BSW
B–W
L–B
R–B
From A/C Amplifier <28–5>
From Back–Up Light SW <27–3>
E18 A, E19 B, E20 C, E21 D
ENGINE ECU
E2
THF
THW
THA
PIM
VC
BR
G–R
G–B
W–G
P–L
L–R
F69
FUEL TEMP. SENSOR
W 2
EFI WATER TEMP. SENSOR
I31
INTAKE AIR TEMP. SENSOR
T25
TURBO PRESSURE SENSOR
C13 B, C14 C
COMBINATION METER
CHECK ENGINE
GLOW
B
B–Y
R–W
W
GND
A18
ACCEL POSITION SENSOR
VA
VC
IDL
E2
VAS
R–Y
L–R
LG–B
BR–W
P–L
IQ1
VCC
E2C
E02
E01
FSW
Intake manifold
EC
F68
FIRST POSITION SW
ED7
ED4
R–L
W–B