RELAY LOCATIONS

[Instrument Panel]

(LHD)

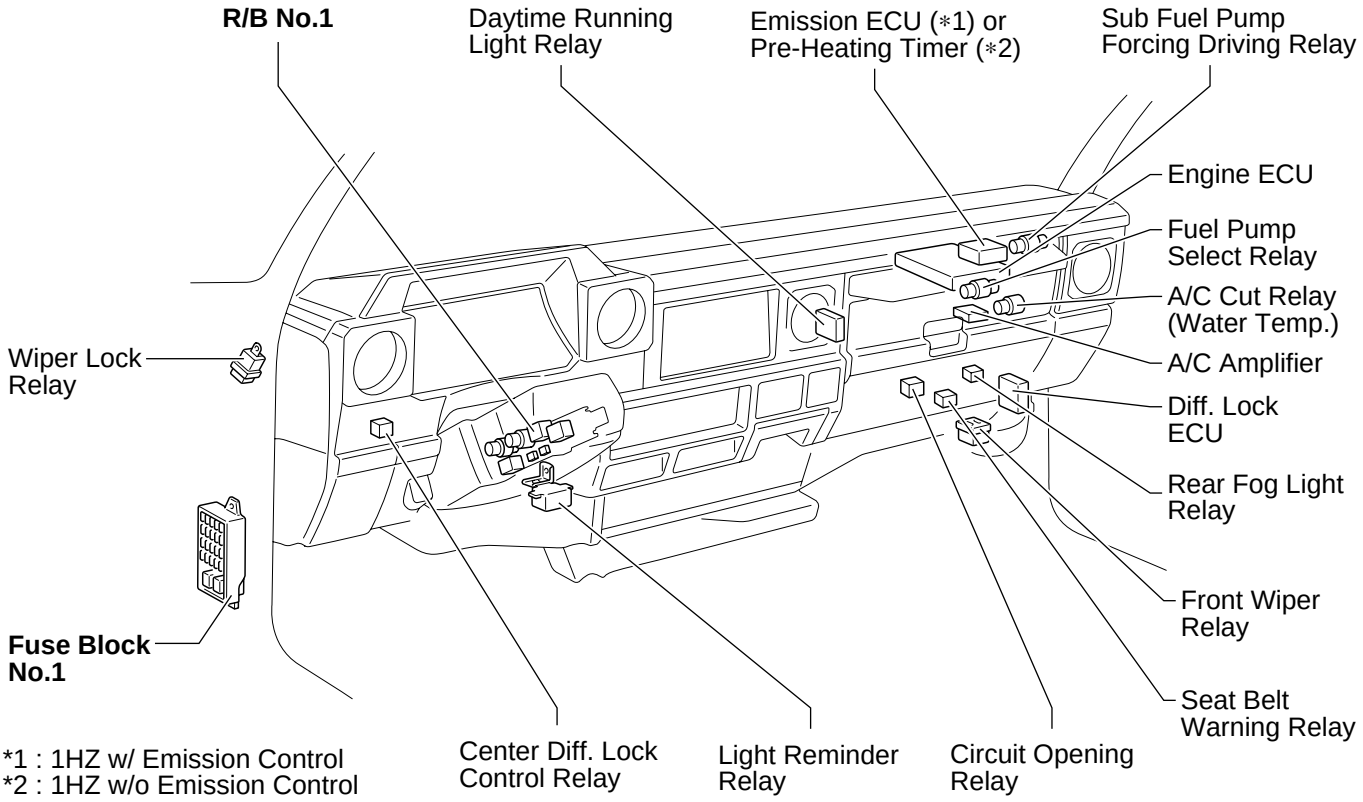

*1 : 1HZ w/ Emission Control
*2 : 1HZ w/o Emission Control

(RHD)

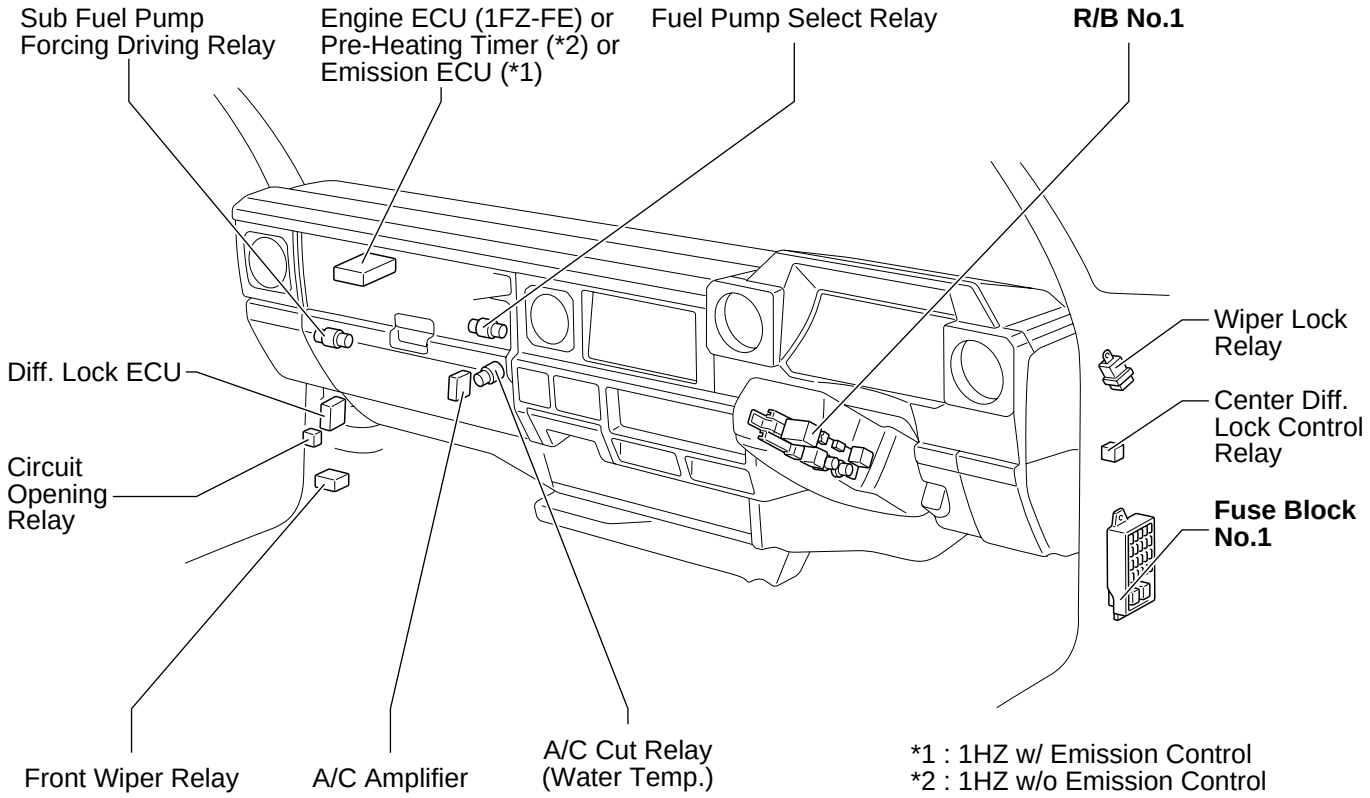

*1 : 1HZ w/ Emission Control
*2 : 1HZ w/o Emission Control