Position of Parts in Engine Compartment

[RHD : 1HZ]

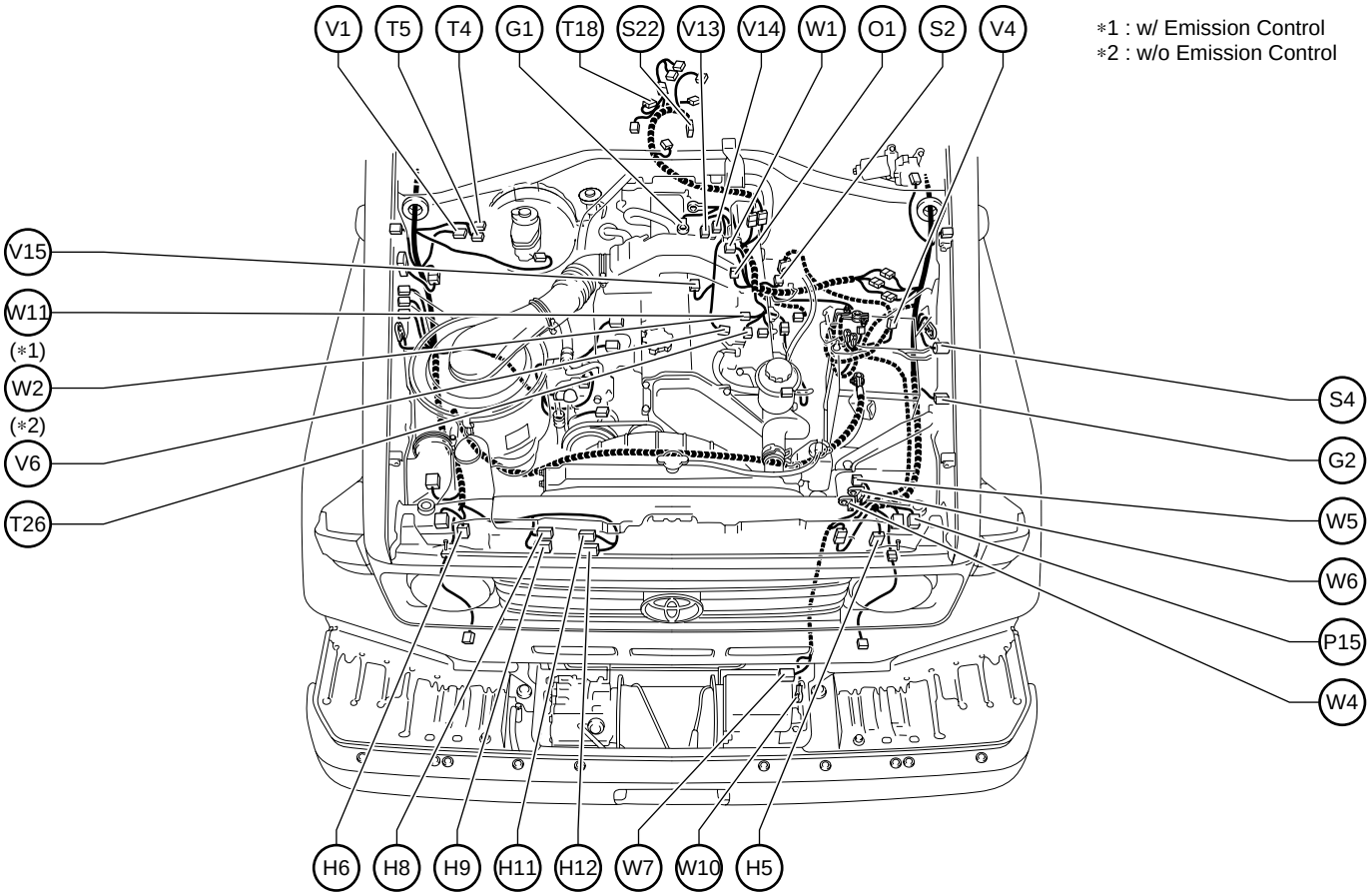

G 1 Glow Plug
G 2 Glow Plug Relay (Main)

H 5 Headlight LH
H 6 Headlight RH
H 8 Horn (High)
H 9 Horn (High)
H11 Horn (Low)
H12 Horn (Low)

O 1 Oil Pressure Sender

P15 Power Outlet

S 2 Starter
S 4 Starter Relay
S22 Speed Sensor (Combination Meter)

T 4 Transfer Control Solenoid (2WD)
T 5 Transfer Control Solenoid (4WD)
T18 Transfer L4 Position SW
T26 Throttle Position Sensor and Timing Control Valve

V 1 Vacuum SW (Brake)
V 4 VSV (A/C Idle–Up)
V 6 VRV (EGR)
V13 Vacuum Sensor
V14 VSV (BACS)
V15 VSV (EGR Cut)

W 1 Water Temp. Sender
W 2 Water Temp. Sensor (Glow)
W 4 Winch Main Relay
W 5 Winch Main Relay
W 6 Winch Main Relay
W 7 Winch Motor and Magnetic SW
W10 Winch Motor and Magnetic SW
W11 Water Temp. Sensor (Emission Control)