Position of Parts in Engine Compartment

[LHD : 1HZ]

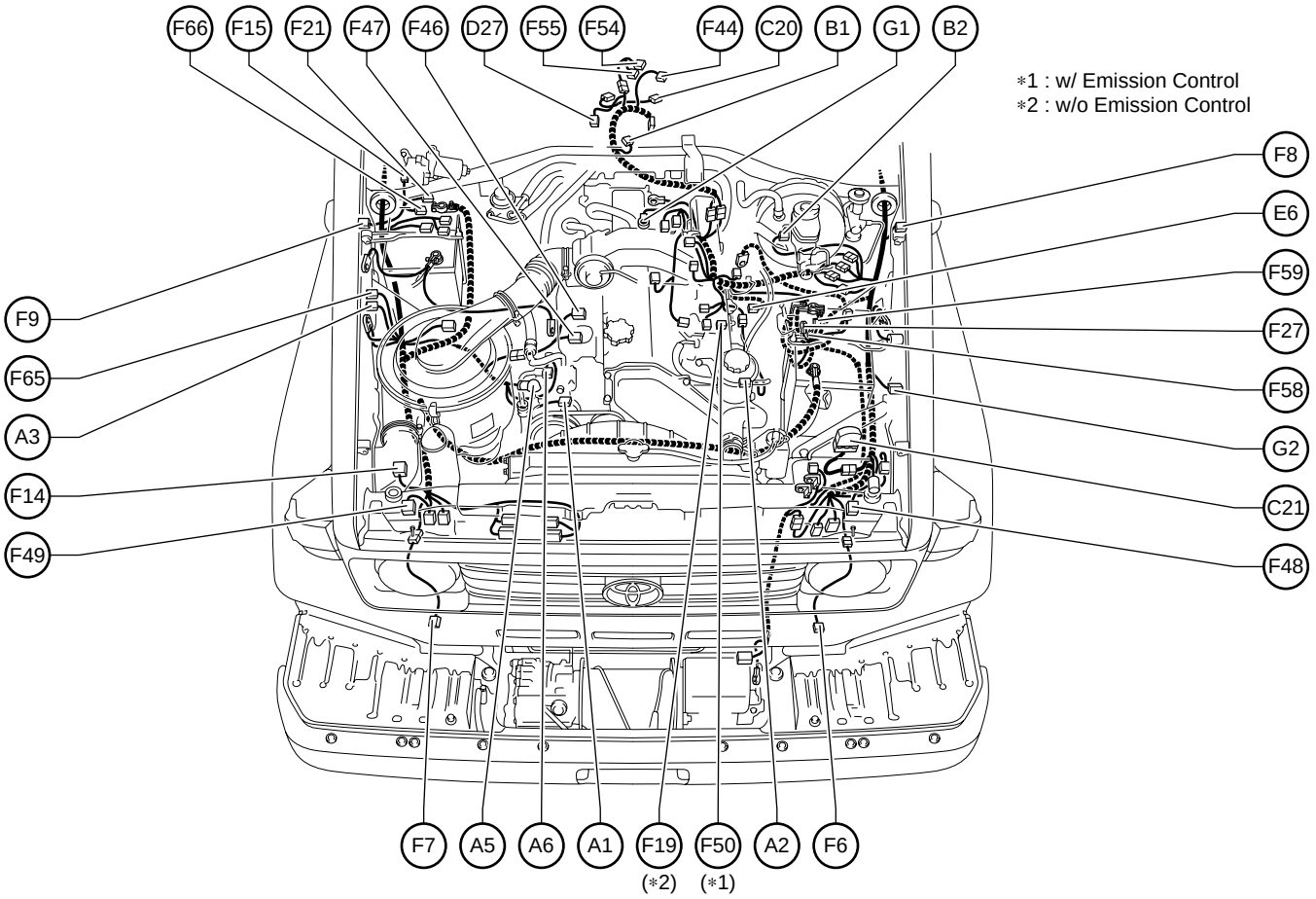

A 1 A/C Magnetic Clutch
A 2 A/C Water Temp. SW
A 3 Air Cleaner Warning SW
A 5 Alternator
A 6 Alternator

B 1 Back–Up Light SW
B 2 Brake Fluid Level SW

C20 Center Diff. Lock Indicator SW
C21 Check Connector

D27 Detection SW (Transfer Neutral Position)

E 6 Engine Oil Level Sensor

F 6 Front Fog Light LH
F 7 Front Fog Light RH
F 8 Front Side Turn Signal Light LH
F 9 Front Side Turn Signal Light RH
F 14 Front Washer Motor
F 15 Front Wiper Motor
F 19 Fuel Cut Solenoid and Pick–Up Sensor
F 21 Fuel Heater
F 27 Fusible Link Box
F 44 Fuel Sender (Front)
F 46 Front Diff. Lock Control Motor
F 47 Front Diff. Lock Position SW
F 48 Front Turn Signal Light and Clearance Light LH
F 49 Front Turn Signal Light and Clearance Light RH
F 50 Fuel Cut Solenoid and Crankshaft Position Sensor
F 54 Fuel Solenoid Valve 1
F 55 Fuel Solenoid Valve 2
F 58 Fusible Link Box
F 59 Fusible Link Box
F 65 Fuel Sediment SW 1
F 66 Fuel Sediment SW 2

G 1 Glow Plug
G 2 Glow Plug Relay (Main)