Position of Parts in Instrument Panel

[LHD]

∗1 : General, G.C.C.
∗2 : Europe
∗3 : Except Europe
∗4 : 1HZ w/ Emission Control
∗5 : Except China, Algeria
∗6 : China, Algeria

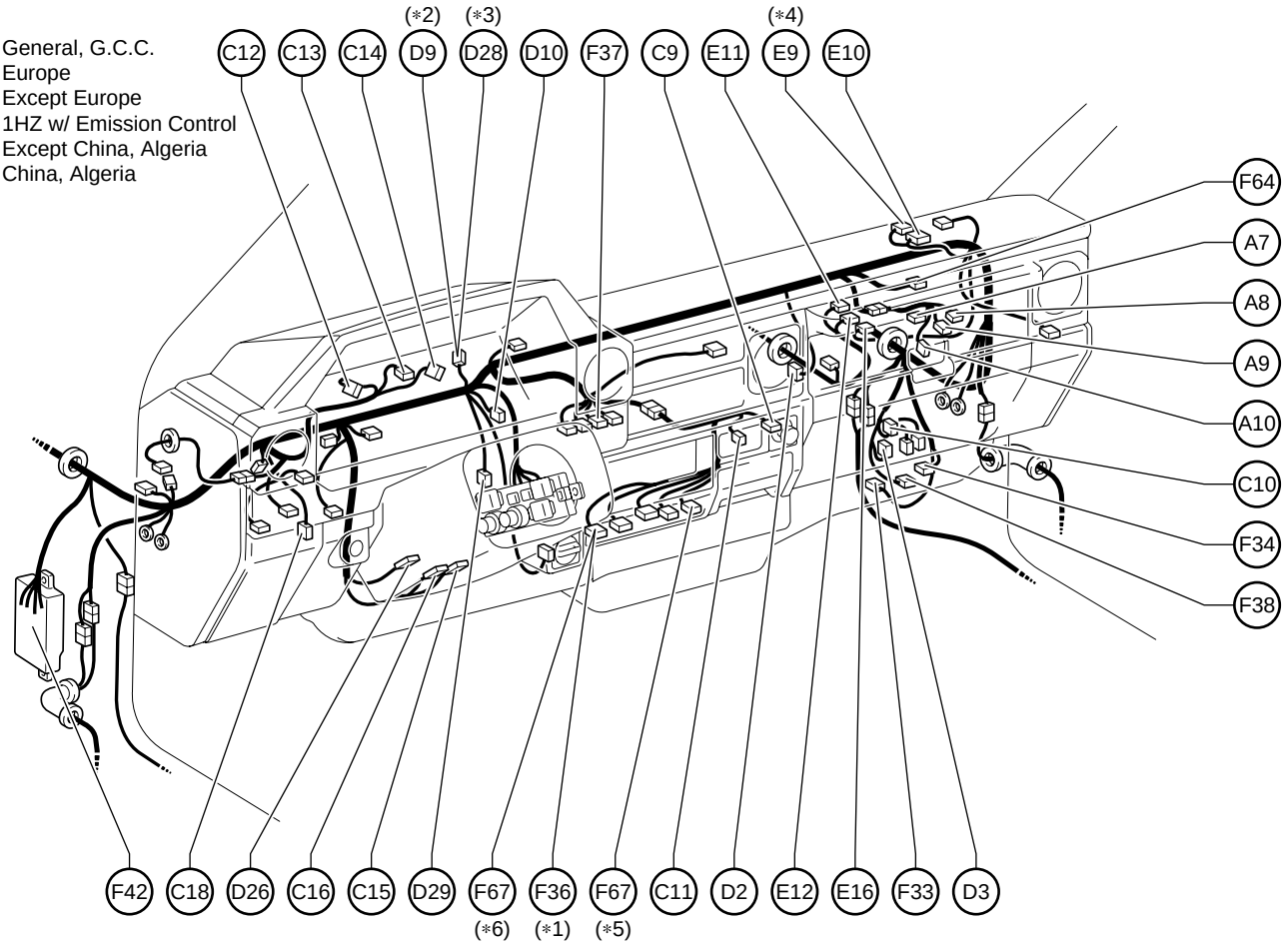

A 7 A/C Amplifier
A 8 A/C Cut Relay (Water Temp.)
A 9 A/C Dual Pressure SW
A10 A/C Thermistor

C 9 Cigarette Lighter
C10 Circuit Opening Relay
C11 Clock
C12 Combination Meter
C13 Combination Meter
C14 Combination Meter
C15 Combination SW
C16 Combination SW
C18 Center Diff. Lock Control Relay

D 2 Daytime Running Light Relay or Short Connector
D 3 Diff. Lock ECU
D 9 Diode (Light Reminder)
D10 Diode (Rear Fog Light)
D26 Diff. Lock Control SW
D28 Diode (Seat Belt Warning)
D29 DLC3

E 9 Emission ECU
E10 Emission ECU
E11 Engine ECU
E12 Engine ECU
E16 Engine ECU

F33 Front Blower Motor
F34 Front Blower Resistor
F36 Front Fog Light SW
F37 Front Heater Blower SW
F38 Front Wiper Relay
F42 Fuse Block No.1
F64 Fuel Pump Select Relay
F67 Fuel Tank Changeover SW