OVERALL ELECTRICAL WIRING DIAGRAM

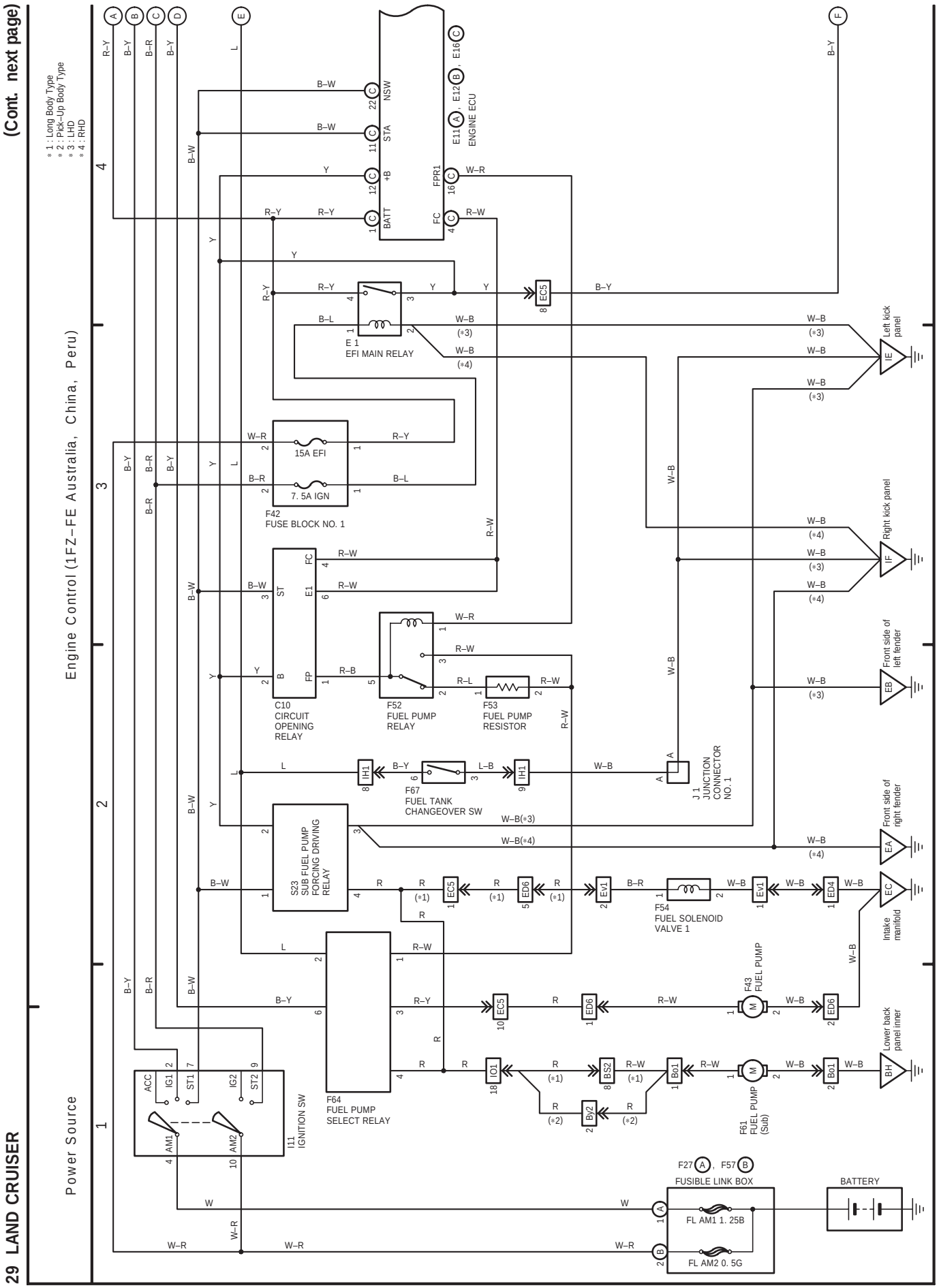

(Cont. next page)

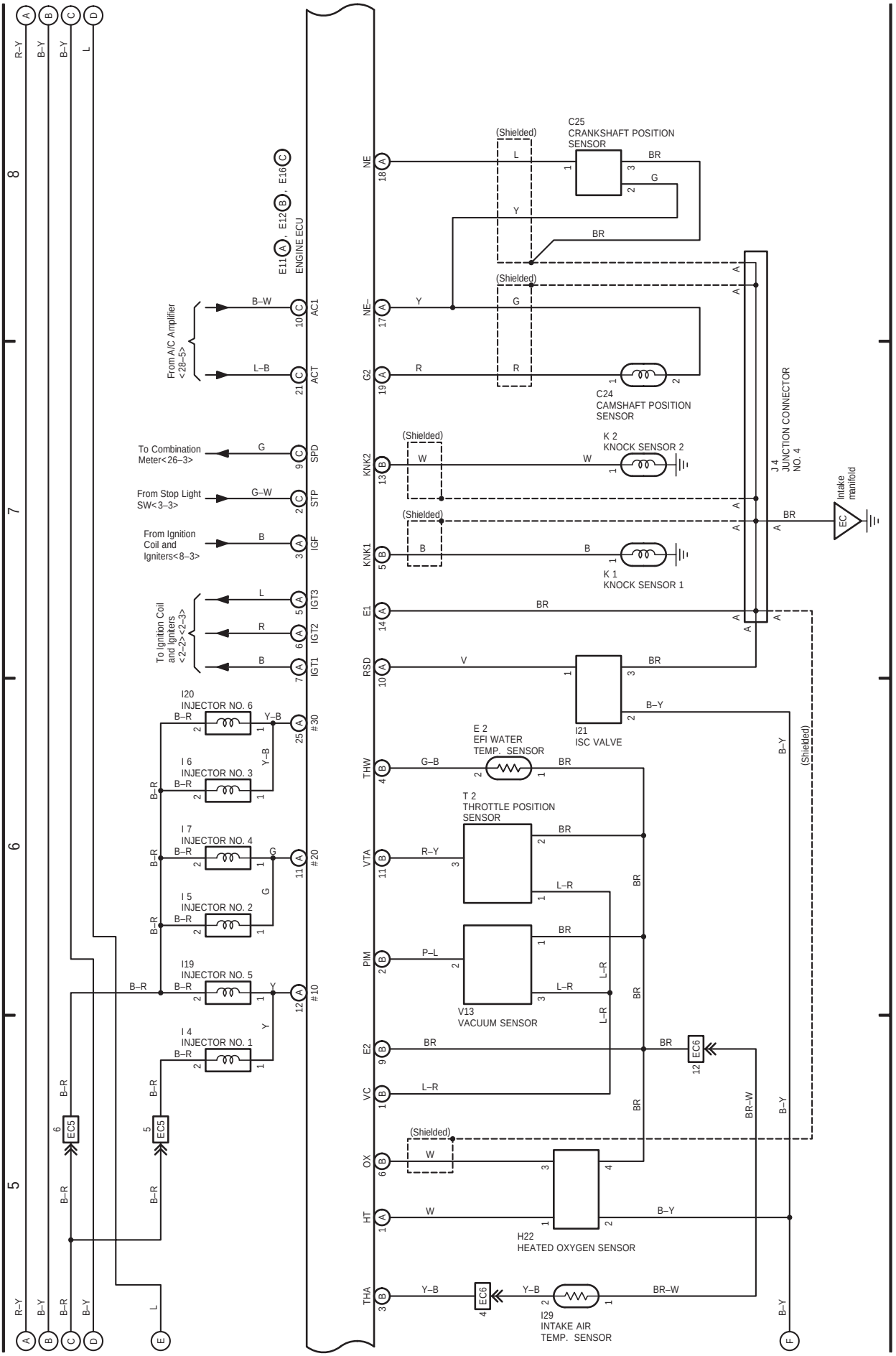

29 LAND CRUISER (Cont' d)

