OVERALL ELECTRICAL WIRING DIAGRAM

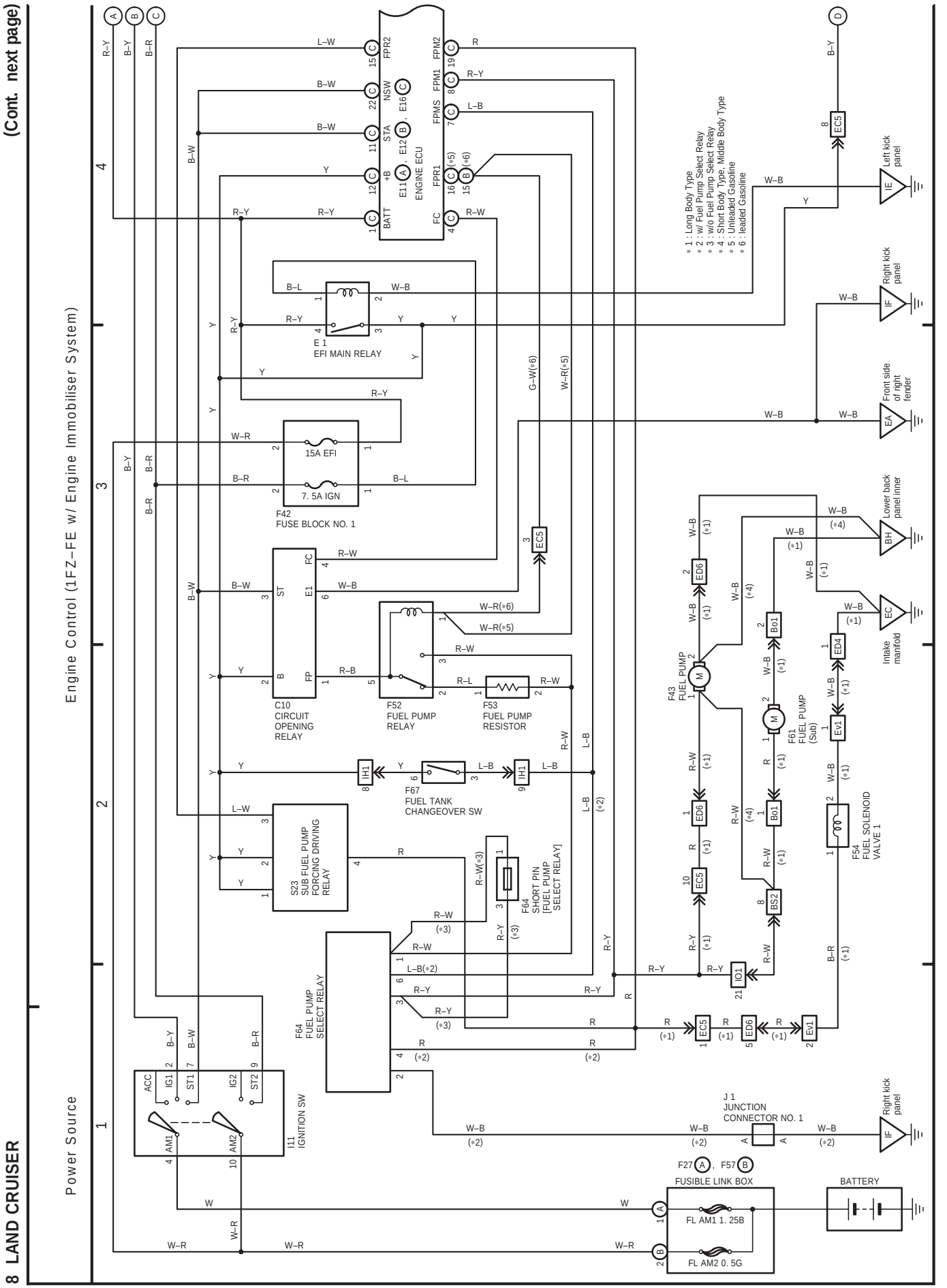

(Cont. next page)

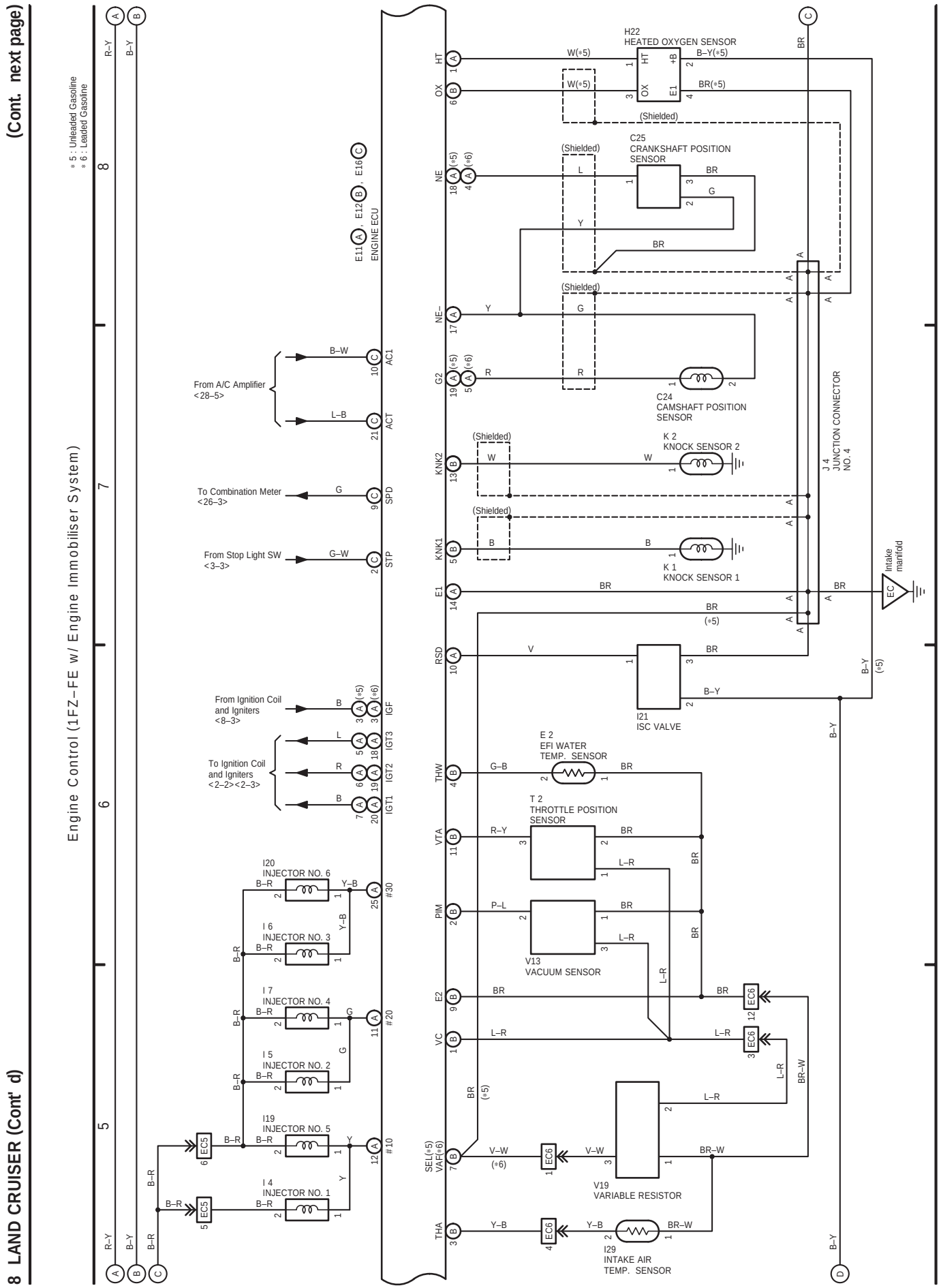

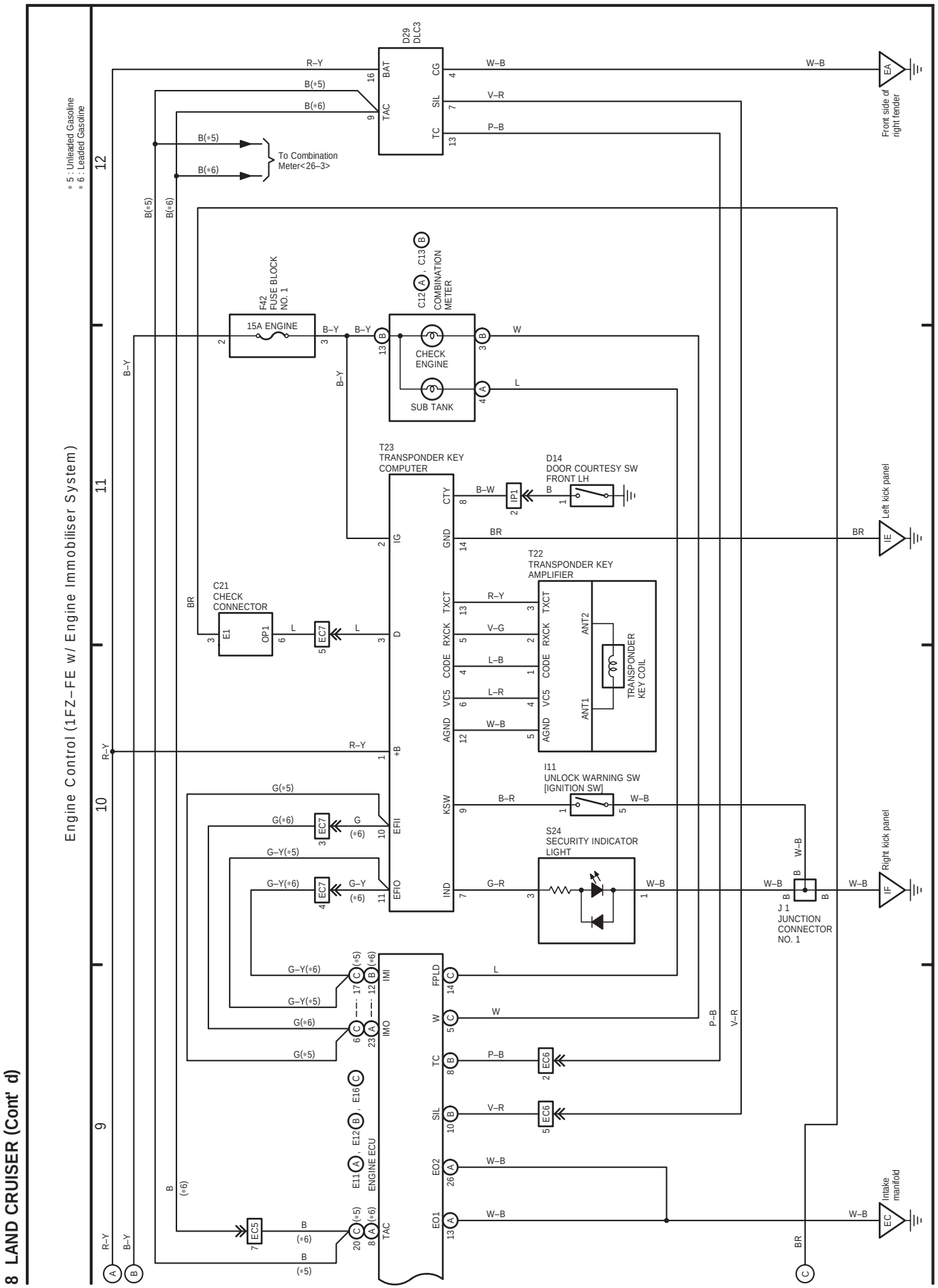
8 LAND CRUISER (Cont' d)
Engine Control (1FZ–FE w/ Engine Immobiliser System)
* 5 : Unleaded Gasoline
* 6 : Leaded Gasoline
D29 DLC3
BAT
TAC
CG
SIL
TC
To Combination Meter<26–3>
Front side of right fender
F42 FUSE BLOCK NO. 1
15A ENGINE
C12, C13 COMBINATION METER
CHECK ENGINE
SUB TANK
T23 TRANSPONDER KEY COMPUTER
D14 DOOR COURTESY SW FRONT LH
Left kick panel
T22 TRANSPONDER KEY AMPLIFIER
TRANSPONDER KEY COIL
C21 CHECK CONNECTOR
I11 UNLOCK WARNING SW [IGNITION SW]
S24 SECURITY INDICATOR LIGHT
Right kick panel
J 1 JUNCTION CONNECTOR NO. 1
E11, E12, E16 ENGINE ECU
Intake manifold