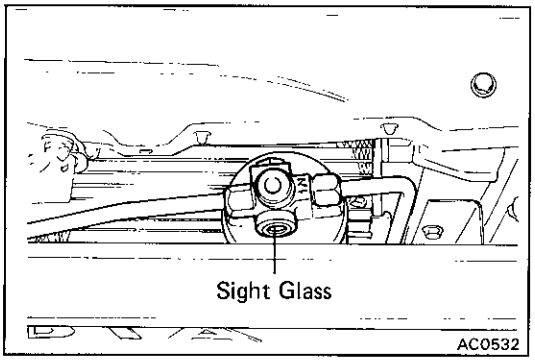

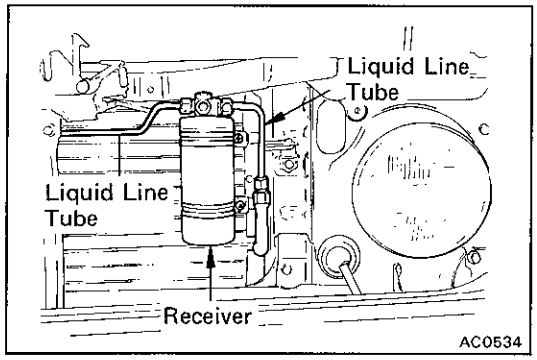

RECEIVER

ON-VEHICLE INSPECTION

CHECK SIGHT GLASS, FUSIBLE PLUG AND FITTINGS FOR LEAKAGE

Use a gas leak tester. Repair as necessary.

REMOVAL OF RECEIVER

(See page AC-4, 5)

1. **DISCHARGE REFRIGERATION SYSTEM (See page AC-19)**
2. **DISCONNECT TWO LIQUID LINE TUBES FROM RECEIVER**

   HINT: Cap the open fittings immediately to keep moisture out of the system.
3. **REMOVE RECEIVER FROM RECEIVER HOLDER**

INSTALLATION OF RECEIVER

(See page AC-4, 5)

1. **INSTALL RECEIVER IN RECEIVER HOLDER**

   HINT: Do not remove the caps until ready for connection.
2. **CONNECT TWO LIQUID LINE TUBES TO RECEIVER**

   Torque: 135 kg-cm (10 ft-lb, 13 N·m)
3. **IF RECEIVER WAS REPLACED, ADD COMPRESSOR OIL TO COMPRESSOR**

   Add 20 cc (0.7 oz)
4. **EVACUATE, CHARGE AND TEST REFRIGERATION SYSTEM (See page AC-19)**

COOLING UNIT

ON-VEHICLE INSPECTION OF EXPANSION VALVE

1. **CONNECT MANIFOLD GAUGE TO COMPRESSOR**
2. **CHECK EXPANSION VALVE OPERATION**

   (a) Run the engine at fast idle with the air conditioning on.

   (b) Check that the low pressure reading is between 0.5 — 5.0 kg/cm^2 (7 — 71 psi, 49 — 490 kPa).

   If the reading is too low, check and replace the expansion valve and/or receiver.

   If the reading is too high, tighten the remote valve holders and/or replace the expansion valve.

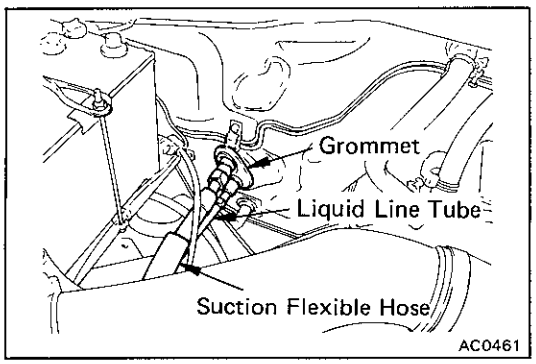

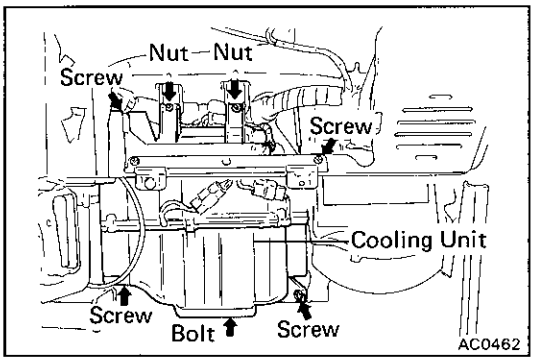

REMOVAL OF COOLING UNIT

1. **DISCONNET NEGATIVE CABLE FROM BATTERY**
2. **DISCHARGE REFRIGERATION SYSTEM**
   (See page AC-19)
3. **DISCONNECT SUCTION FLEXIBLE HOSE FROM COOLING UNIT OUTLET FITTING**
4. **DISCONNECT LIQUID LINE TUBE FROM COOLING UNIT INLET FITTING**

   NOTE: Cap the open fittings immediately to keep moisture out of the system.
5. **REMOVE GROMMETS FROM INLET AND OUTLET FITTINGS**
6. **REMOVE FOLLOWING COMPONENTS:**
   (a) Glove box
   (b) Duct
7. **DISCONNECT FOLLOWING CONNECTORS:**
   (a) Temp. control switch connector
   (b) Connector connected to vehicle wire harness
8. **REMOVE COOLING UNIT**

   Remove the two nuts, the four screws and one bolt.
9. **REMOVE A/C WIRE HARNESS FROM COOLING UNIT**

