LIGHTING SYSTEM

Parts Location

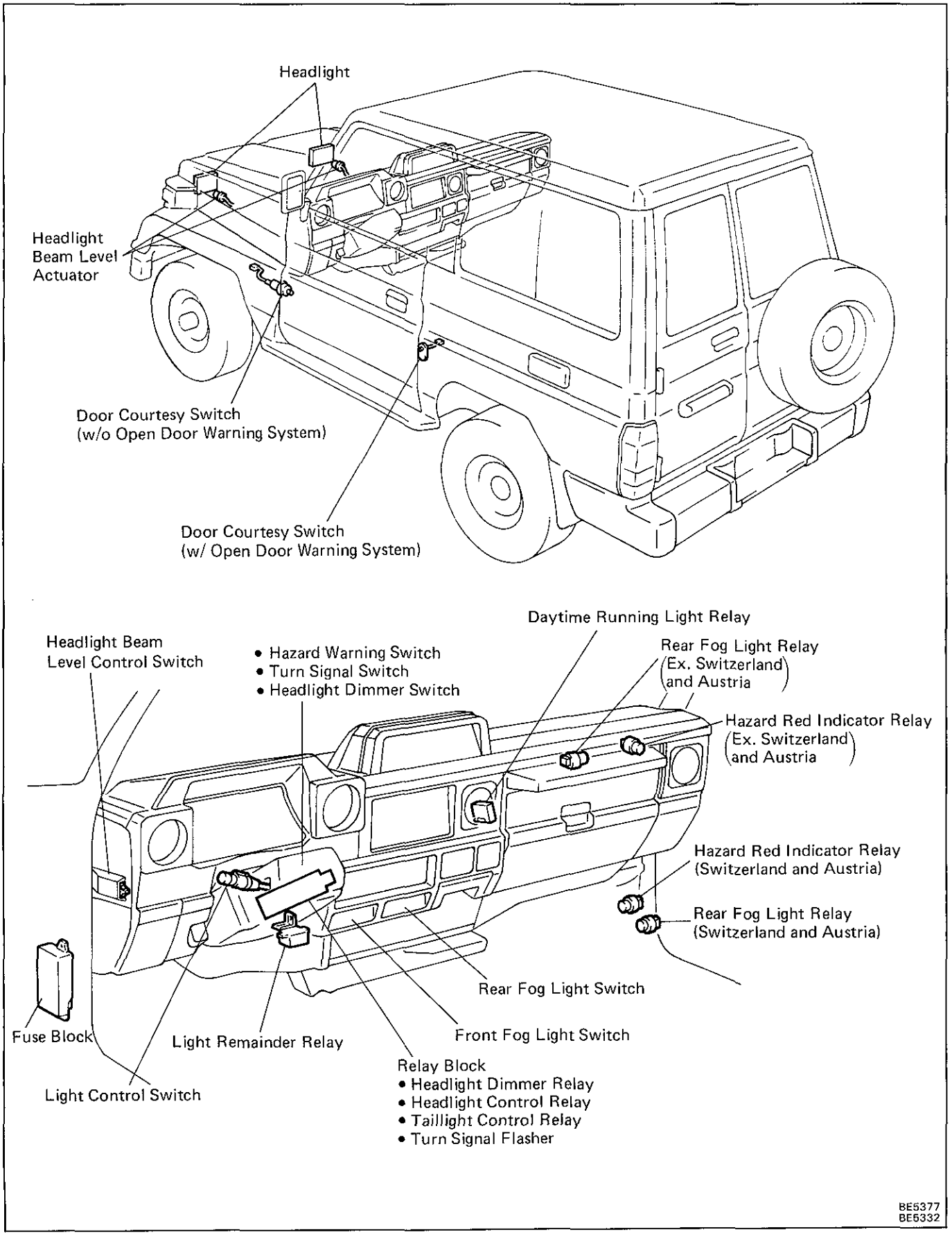

BE5377
BE5332

Wiring and Connector Diagrams

(Headlight and Taillight System)

• **Except Europe**

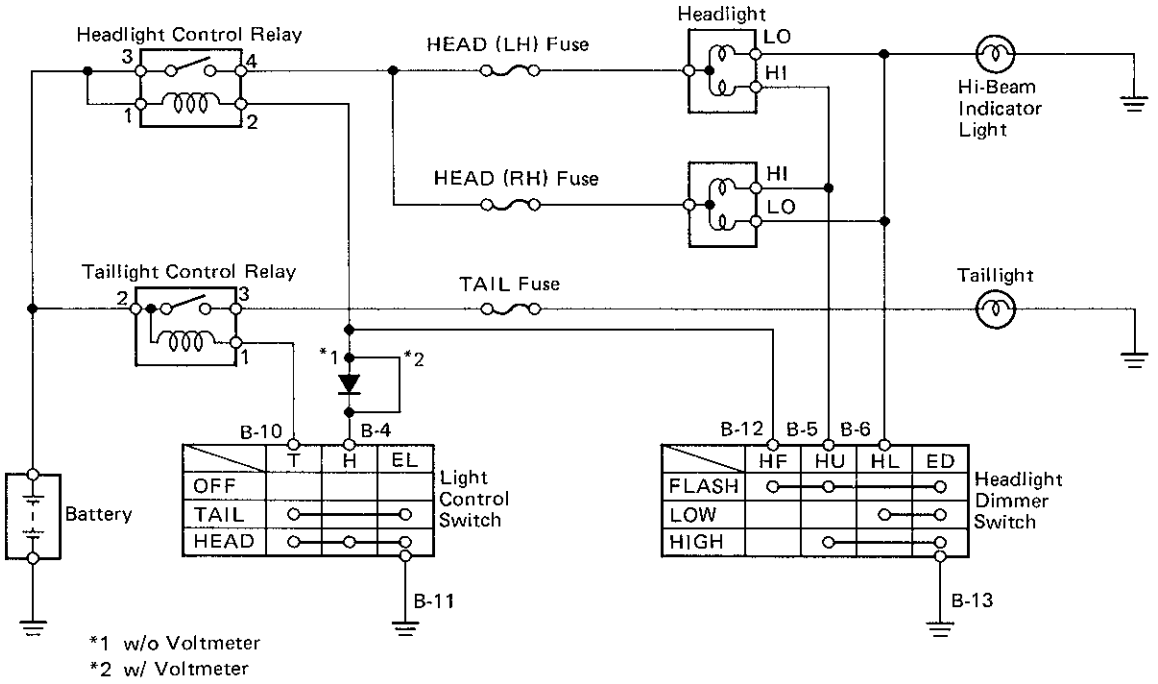

The POWER SOURCE CIRCUIT has been simplified. For full details, see pages BE-10, 11, 12.

• **Europe**

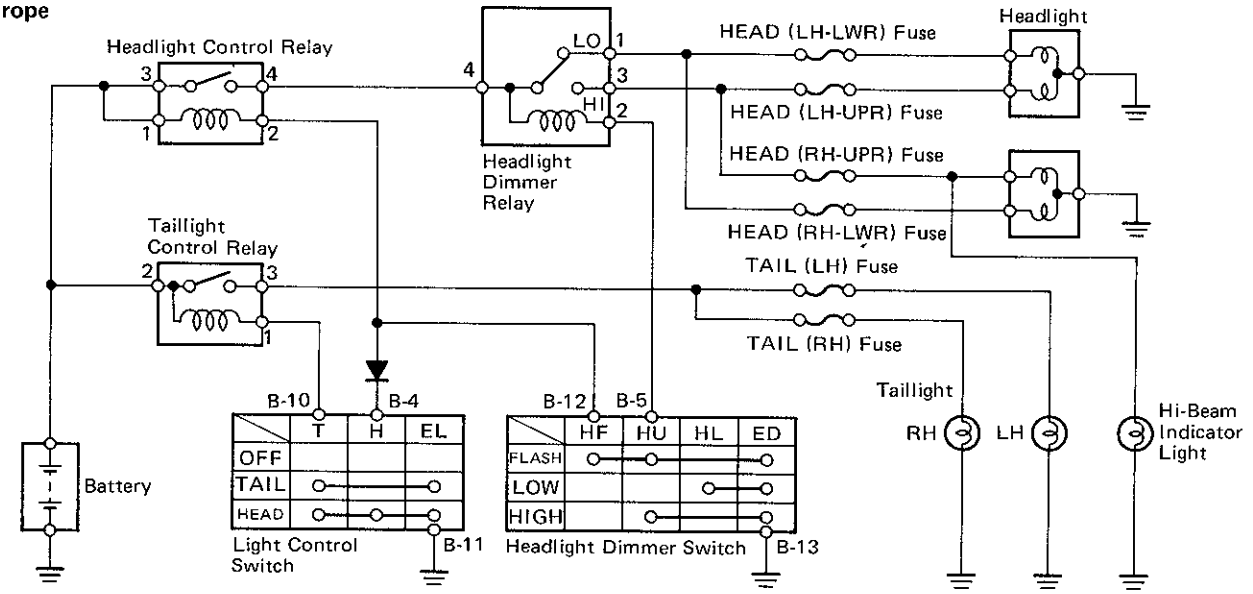

The POWER SOURCE CIRCUIT has been simplified. For full details, see pages BE-10, 11, 12.

• Light Control Switch
• Dimmer Switch

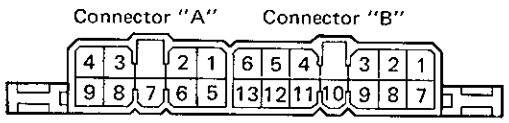

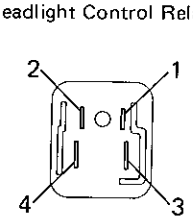

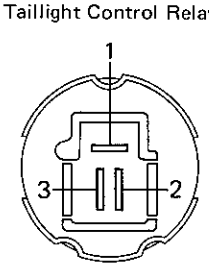

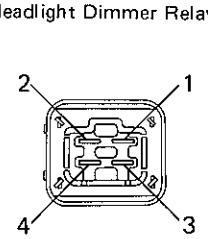

BE5333
BE5334
BE0111 BE1838 BE2763 BE1839

• **w/ Daytime Running Light System (with Rear Fog Light System)**

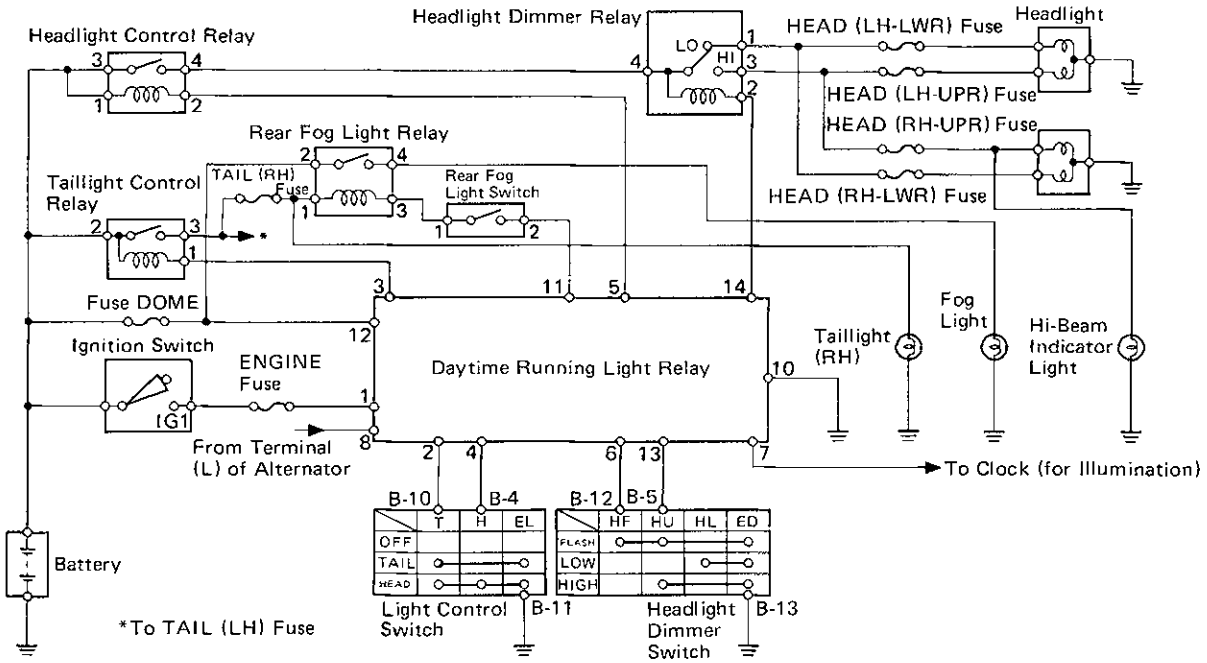

The POWER SOURCE CIRCUIT has been simplified. For full details, see pages BE-10, 11, 12.

• Light Control Switch
• Dimmer Switch

Connector "A" Connector "B"

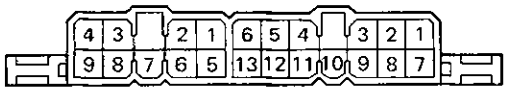

Daytime Running Light Relay

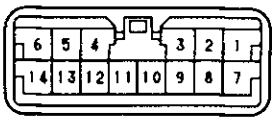

Headlight Control Relay

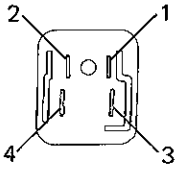

Taillight Control Relay

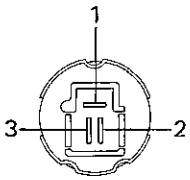

Headlight Dimmer Relay

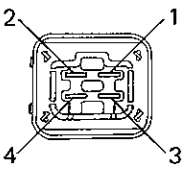

Rear Fog Light Switch



Rear Fog Light Relay

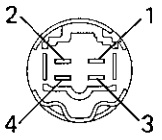

BE5335
BE0111 BE4219 BE1838
BE2763 BE1839 S-4-2-C BE1647

Front Fog Light System

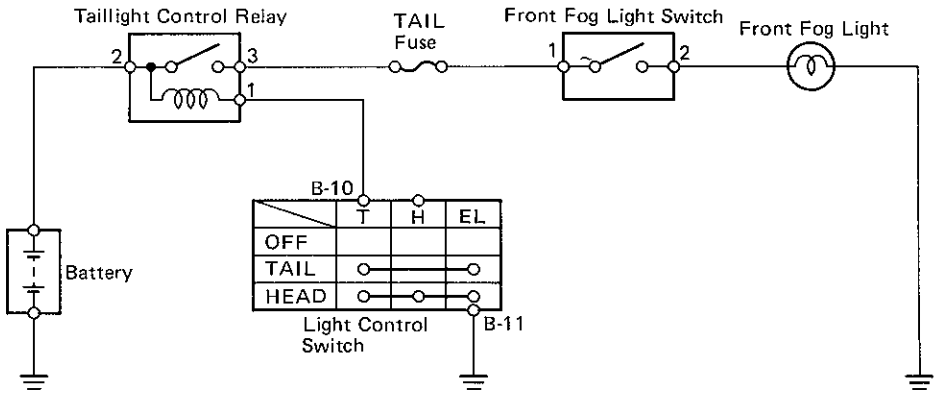

The POWER SOURCE CIRCUIT has been simplified. For full details, see pages BE-10, 11, 12.

Light Control Switch

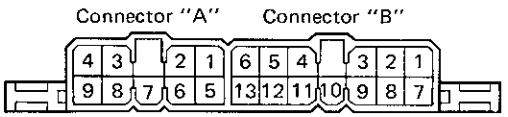

Taillight Control Relay

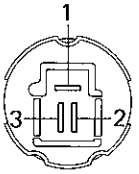

Front Fog Light Switch

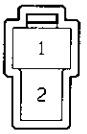

BE5336
BE0111 BE2763 H-2-2

Rear Fog Light System

w/ Daytime Running Light System

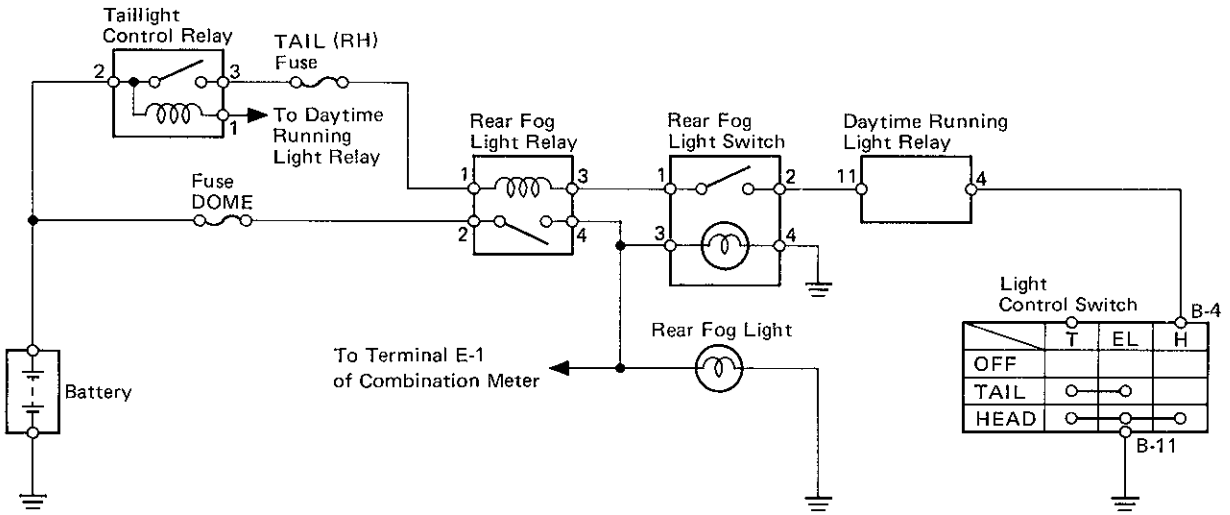

The POWER SOURCE CIRCUIT has been simplified. For full details, see pages BE-10, 11, 12.

Light Control Switch

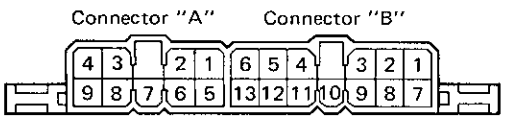

Rear Fog Light Switch



Rear Fog Light Relay

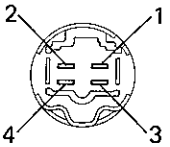

Daytime Running Light Relay

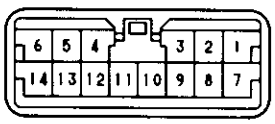

Taillight Control Relay

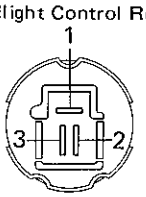

BE5337
BE0111 S-4-2-C BE1647
BE4219 BE2763

w/o Daytime Running Light System

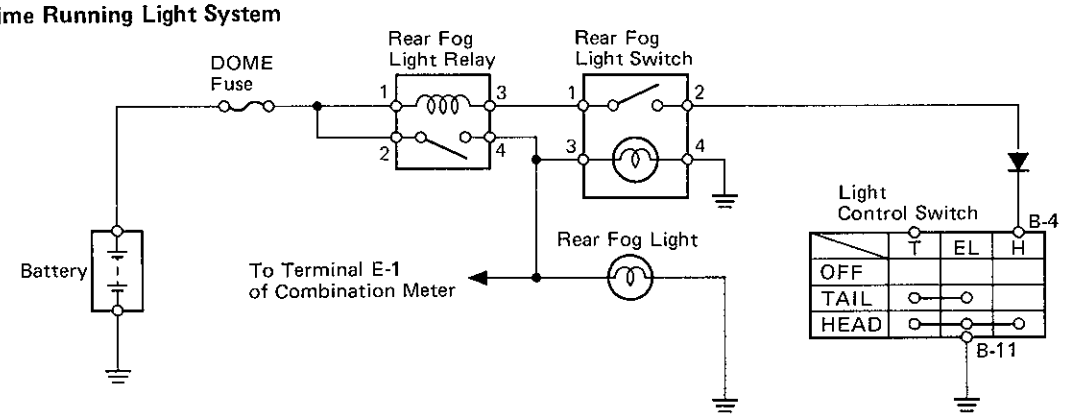

The POWER SOURCE CIRCUIT has been simplified. For full details, see pages BE-10, 11, 12.

Light Control Switch

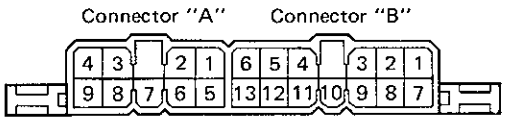

Rear Fog Light Switch



Rear Fog Light Relay

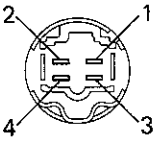

BE5338
BE0111 S-4-2-C BE1647

Turn Signal and Hazard Warning System

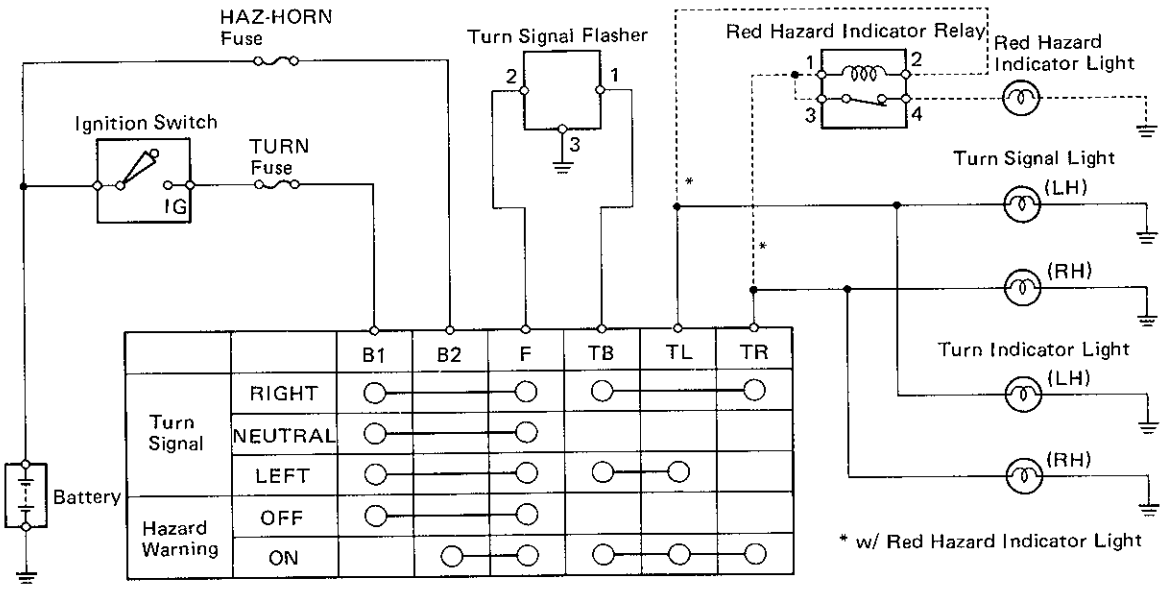

The POWER SOURCE CIRCUIT has been simplified. For full details, see pages BE-10, 11, 12.

- Turn Signal Switch
- Hazard Warning Switch

Connector "A" Connector "B"

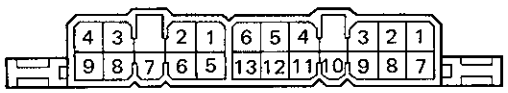

Turn Signal Flasher

12 V Vehicles

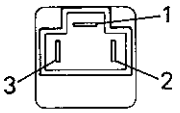

24 V Vehicles

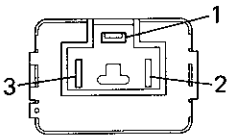

Red Hazard Indicator Relay

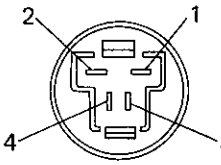

BE5410
BE0111 BE2896 BE5340 AC1377

Lights-On Warning System

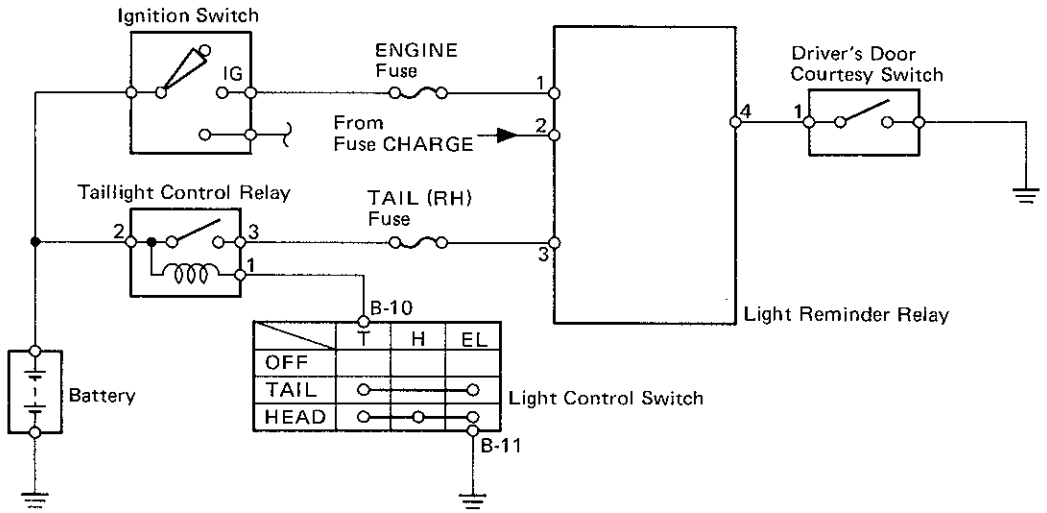

The POWER SOURCE CIRCUIT has been simplified. For full details, see pages BE-10, 11, 12.

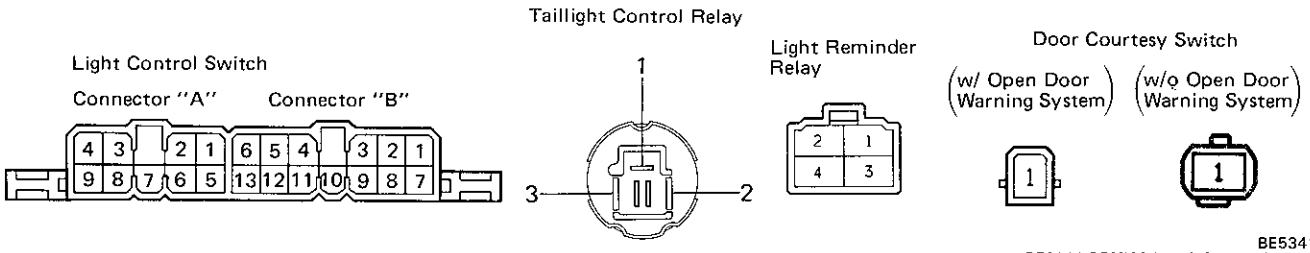

BE5341
BE0111 BE2763 H-4-2 GA-1-1 S-1-1-8

Headlight Beam Level Control System

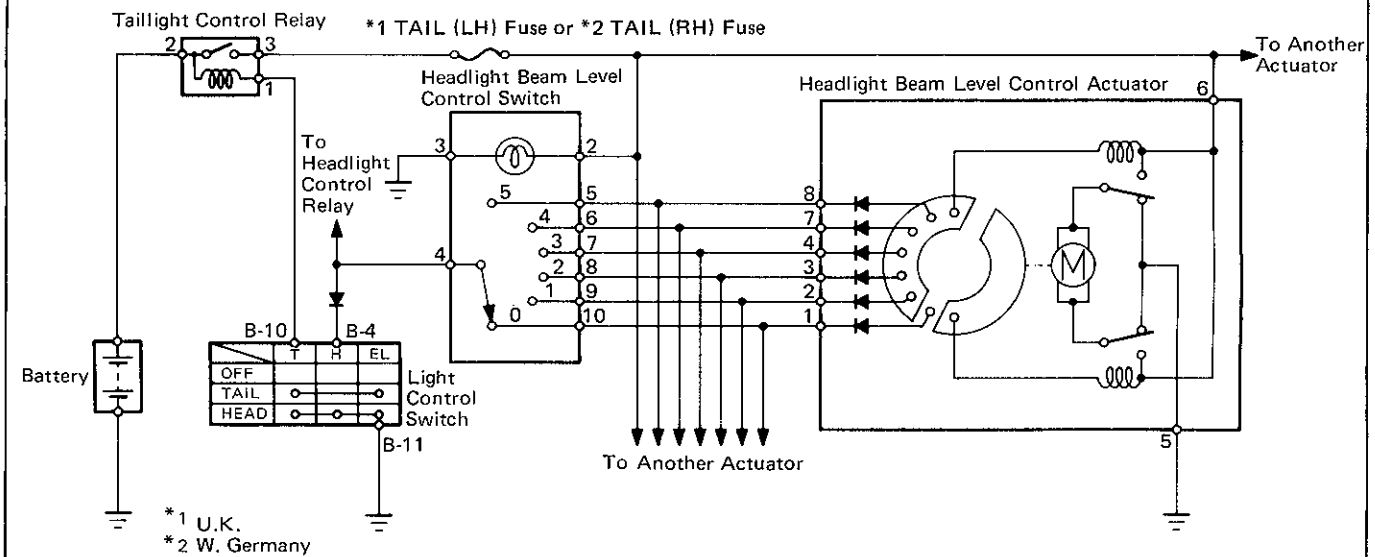

The POWER SOURCE CIRCUIT has been simplified. For full details, see pages BE-10, 11, 12.

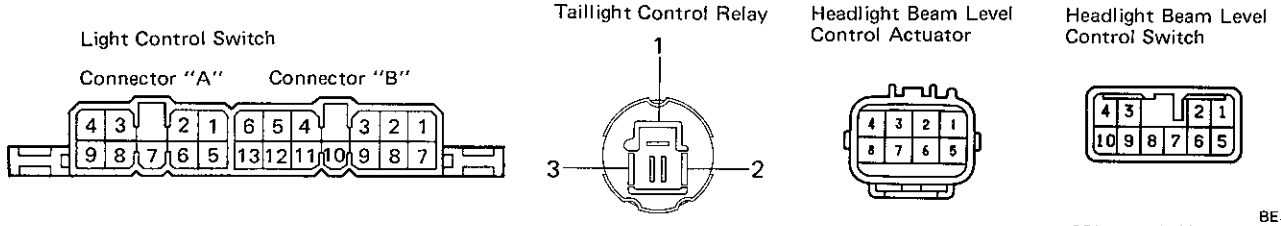

BE5342
BE0111 BE2763 Ie-8-2 S-10-2-A

Part Adjustment

Adjustment of Light Aiming

Light-Duty Vehicles

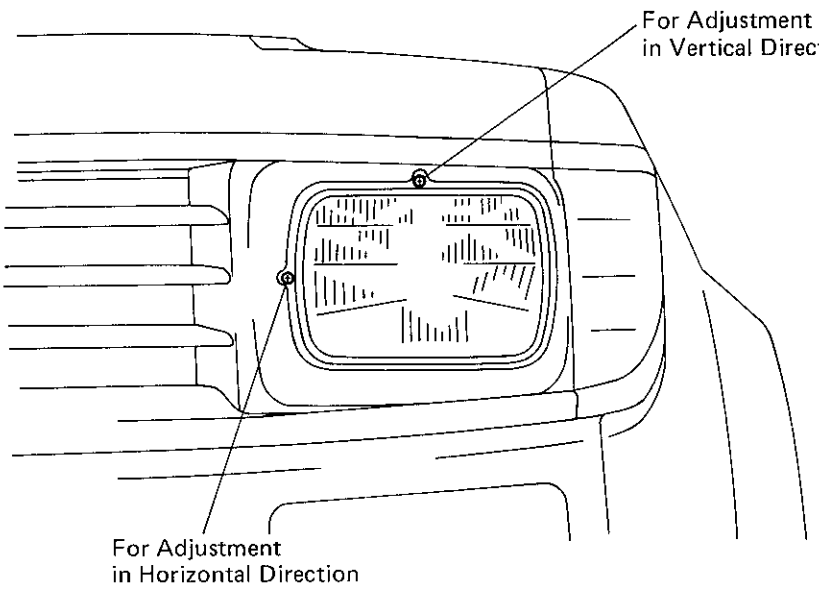

Heavy-Duty Vehicles

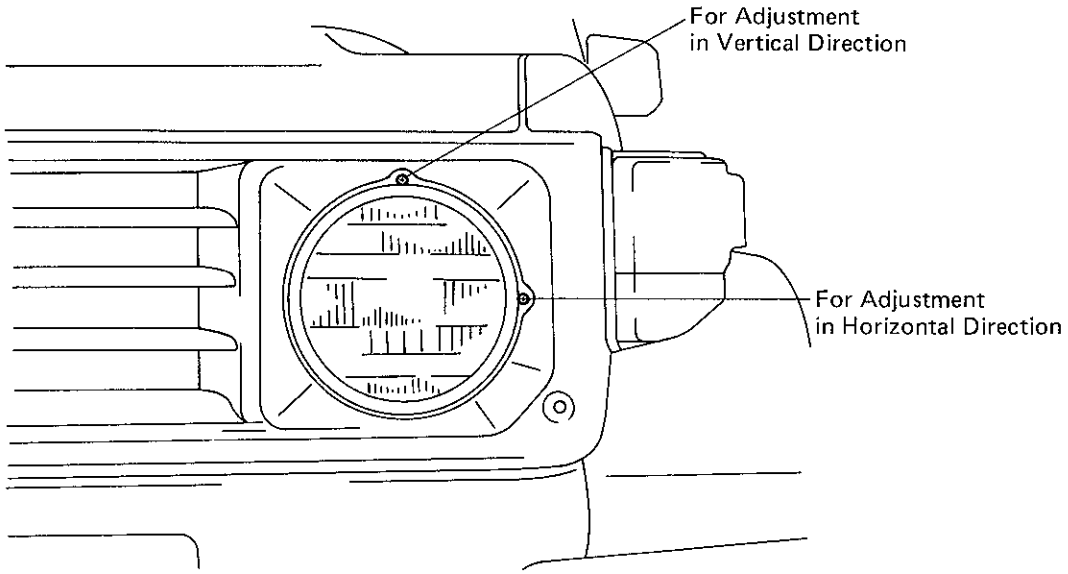

BE5343
BE5378

HINT: Before adjusting headlights equipped with a headlight beam level control system, first return the headlights to standard position by moving the control switch to "0" position.

Troubleshooting

Problem	Possible cause	Remedy	Page
Only one light comes ON	Light bulb burned out HEAD fuse blown Socket, wire or ground faulty	Replace bulb Replace fuse and check for short	 BE-4
Headlights do not light	Fusible link blown HEAD fuse blown Headlight control relay faulty Light control/dimmer switch faulty Headlight dimmer relay faulty (Europe) Wiring or ground faulty	Replace fusible link Replace fuse and check for short Check relay Check switch Check relay Repair as necessary	 BE-4 BE-29 BE-29 BE-30
High beam headlights or headlight flashers do not operate	Light control/dimmer switch faulty HEAD (UPR) fuse blown (Europe) Headlight dimmer relay faulty (Europe) Wiring faulty	Check switch Replace fuse and check for short Check relay Repair as necessary	BE-29 BE-4 BE-30
Tail, parking and license light do not light	Fusible link blown TAIL fuse blown Taillight control relay faulty Light control switch faulty Wiring or ground faulty	Replace fusible link Replace fuse and check for short Check relay Check switch	 BE-4 BE-30
Stop lights do not light	STOP fuse blown Stop light switch faulty Wiring or ground faulty	Replace fuse and check for short Adjust or replace switch Replace as necessary	BE-4
Stop lights stay on	Stop light switch faulty	Adjust or replace switch	
Daytime running light system does not operate	DOME fuse blown ENGINE fuse blown TAIL fuse blown Taillight control relay faulty Headlight control relay faulty Daytime running light relay faulty Headlight dimmer relay faulty Ignition switch faulty Light control/dimmer switch faulty Wiring or ground faulty	Replace fuse and check for short Check relay Check relay Check relay Check relay Check switch Check switch Repair as necessary	BE-4 BE-30 BE-29 BE-30 BE-30 BE-15 BE-29
Front fog light system does not operate	TAIL fuse blown Taillight control relay faulty Front fog light switch faulty Light control switch faulty Wiring or ground faulty	Replace fuse and check for short Check relay Check switch Check switch Repair as necessary	BE-4 BE-30 BE-31 BE-29
Rear fog light system does not operate	DOME fuse blown TAIL fuse blown (w/Daytime running light system) Rear fog light relay faulty Taillight control relay faulty (w/ Daytime running light system) Daytime running light relay faulty (w/ Daytime running light system) Rear fog light switch faulty Light control switch faulty Wiring or ground faulty	Replace fuse and check for short Check relay Check relay Check relay Check switch Check switch	BE-4 BE-31 BE-30 BE-30 BE-31 BE-29

Troubleshooting (Cont'd)

Problem	Possible cause	Remedy	Page
Turn signal does not flash on one side	Turn signal switch faulty Wiring or ground faulty	Check switch Repair as necessary	BE-29
Turn signals do not operate	TURN fuse blown Turn signal flasher faulty Turn signal switch faulty Wiring or ground faulty	Replace fuse and check for short Check flasher Check switch Repair as necessary	BE-4 BE-32 BE-29
Hazard warning lights do not operate	HAZ-HORN fuse blown Turn signal flasher faulty Hazard warning switch faulty Wiring or ground faulty	Replace fuse and check for short Check flasher Check switch	BE-4 BE-32 BE-29
Lights-on warning system does not operate	ENGINE fuse blown CHARGE fuse blown TAIL (RH) fuse blown Taillight control relay faulty Light reminder relay faulty Ignition switch faulty Light control switch faulty Driver's door courtesy switch faulty Wiring or ground faulty	Replace fuse and check for short Check relay Check relay Check switch Check switch Check switch	BE-4 BE-30 BE-33 BE-15 BE-29 BE-33
Headlight beam level control system does not operate	TAIL fuse blown Taillight control relay faulty Headlight beam level control switch faulty Headlight beam level control actuator faulty	Replace fuse and check for short Check relay Check switch Check actuator	BE-4 BE-30 BE-34 BE-34

Parts Replacement

Components

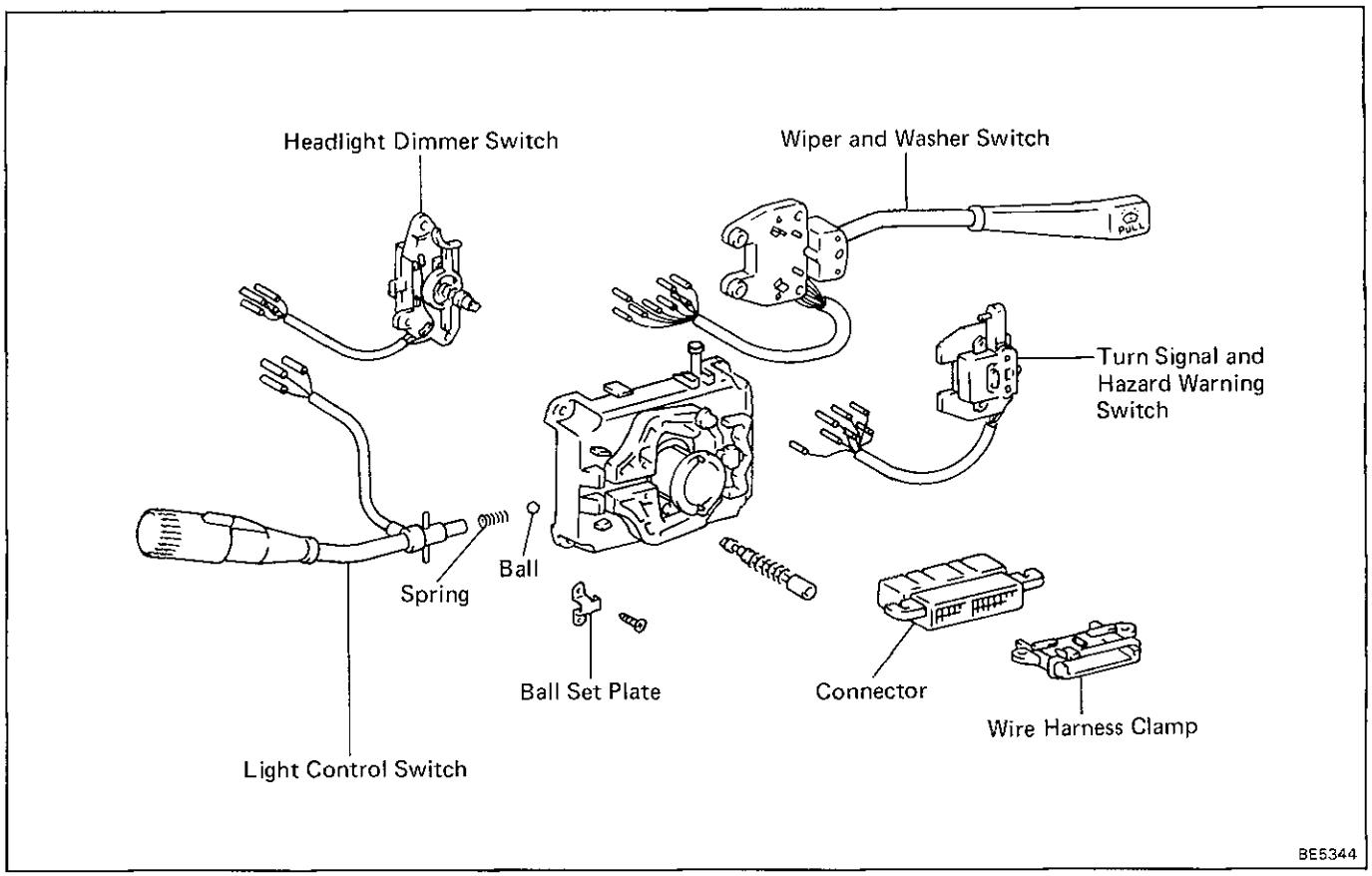

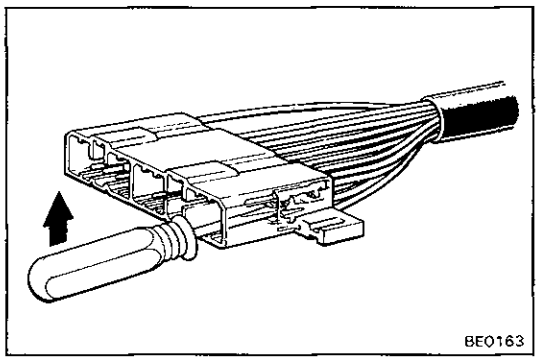

Disassembly of Combination Switch

1. REMOVE TERMINALS FROM CONNECTOR

(a) From the open end, insert a miniature screwdriver between the locking lugs and terminal.

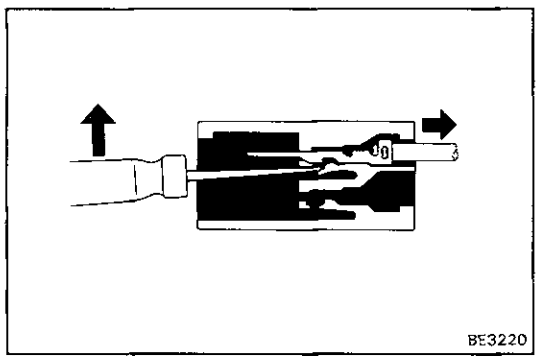

(b) Pry down the locking lugs with the screwdriver and pull the terminal out from the rear.

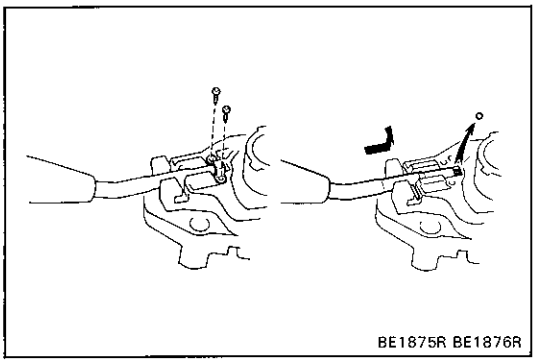

2. **REMOVE LIGHT CONTROL SWITCH**

(a) Remove two screws and the ball set plate from the switch body.

(b) Remove the ball and slide out the switch from the switch body with the spring.

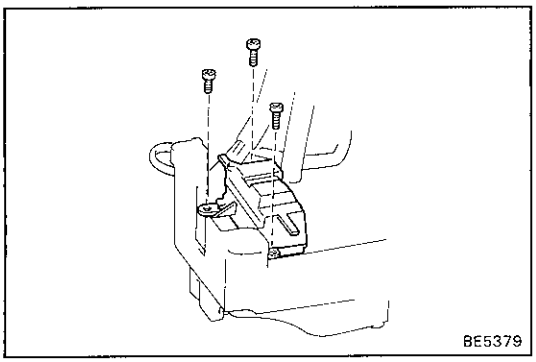

3. **REMOVE HEADLIGHT DIMMER SWITCH**

Remove three screws and the switch from the switch body.

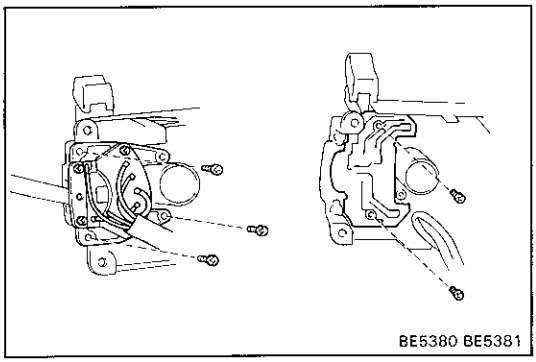

4. **REMOVE WIPER AND WASHER SWITCH**

Remove three screws and the switch from the switch body.

5. **REMOVE TURN SIGNAL AND HAZARD WARNING SWITCH**

Remove two screws and the switch from the switch body.

Assembly of Combination Switch

INSTALL PARTS OF COMBINATION SWITCH IN REVERSE SEQUENCE OF REMOVAL

HINT:

- After installing the switch to the switch body, insert that the switch operates in smoothly.

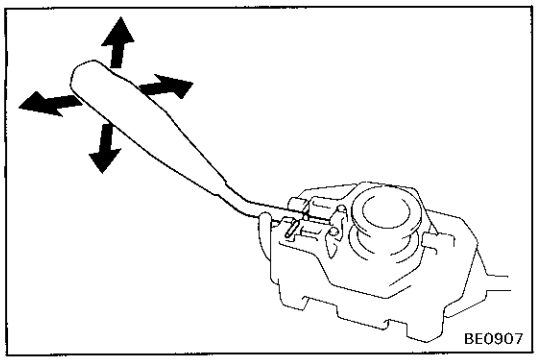

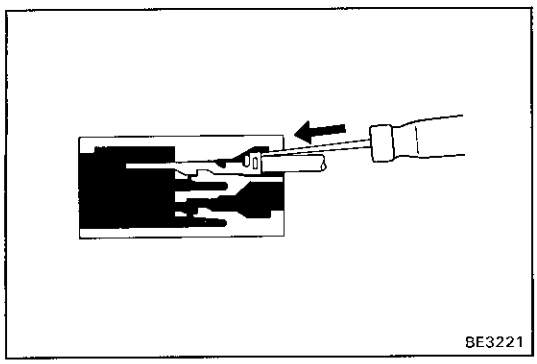

- Push in the terminal until it is securely locked in the connector lug.
- Pull on the wire to confirm that it is securely locked.

System Description

Daytime Running Light System

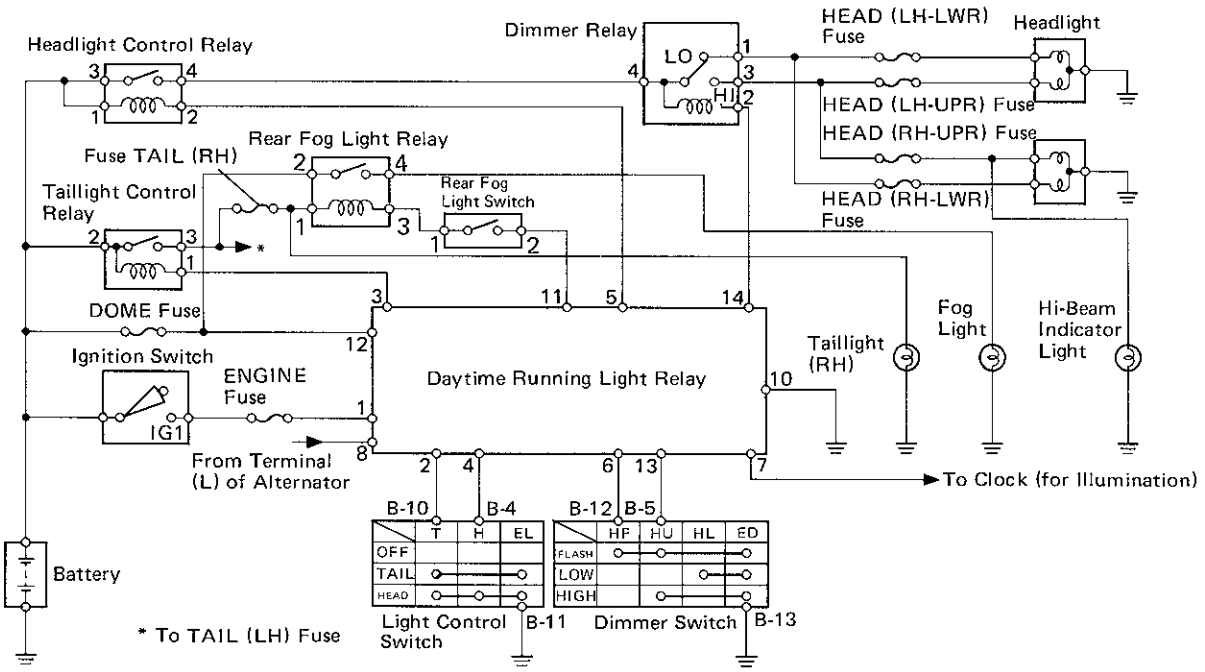

The POWER SOURCE CIRCUIT has been simplified. For full details, see pages BE-10, 11, 12.

BE5335

Standby Operation

- Current flows from the battery to terminal 12 of the Daytime Running Light Relay.
- When the engine is started, alternator voltage is applied from terminal L of the alternator to terminal 8 of the Daytime Running Light Relay.

Operation

1. **IGNITION SWITCH "ON" AND LIGHT CONTROL SWITCH "OFF"**
   When the switches are set, current flows from the battery to terminal 1 of the Daytime Running Light Relay. Also, because continuity is made between terminal 3 of the Daytime Running Light Relay and ground, and terminal 5 of the Daytime Running Light Relay and ground, the Taillight Control Relay and Headlight Control Relay are turned on. Then the taillights and headlights light up.
   HINT: Because terminal 14 of the Daytime Running Light Relay is not grounded at all times, the Headlight Dimmer Relay is off, so the headlights light up at low beam.
2. **IGNITION SWITCH "ON" AND LIGHT CONTROL SWITCH AT "TAIL"**
   When the switches are set, continuity is made between terminal 2 of the Daytime Running Light Relay and ground. Also, because continuity is made between terminal 3 of the Daytime Running Light Relay and ground at all times, the taillights light up.
   (Fog Light): Also, because continuity is made between terminal 11 of the Daytime Running Light Relay and ground, the Rear Fog Light Relay is turned on. Then the fog lights light up on standby.
3. **IGNITION SWITCH "ON" AND LIGHT CONTROL SWITCH AT "HEAD"**
   When the switches are set, continuity is made between terminal 4 of the Daytime Running Light Relay and ground, and terminal 2 of the Daytime Running Light Relay and ground. Also, because continuity is made between terminal 5 of the Daytime Running Light Relay and ground, and terminal 3 of the Daytime Running Light Relay and ground at all times, the taillights and headlights light up.
   HINT: When the Headlight Dimmer Switch is set to "HIGH", continuity is made between terminal 13 of the Daytime Running Light Relay and ground. Also, because continuity is made between terminal 14 of the Daytime Running Light Relay and ground, the Headlight Dimmer Relay is turned on. Then the headlights go on at high beam.
4. **HEADLIGHT DIMMER SWITCH AT "FLASH"**
   When the switch is set, continuity is made between terminal 6 of the Daytime Running Light Relay and ground, and terminal 13 of the Daytime Running Light Relay and ground. Also, because the continuity is made between terminal 5 of the Daytime Running Light Relay and ground, and terminal 14 of the Daytime Running Light Relay and ground, the headlights flash.

Headlight Beam Level Control System

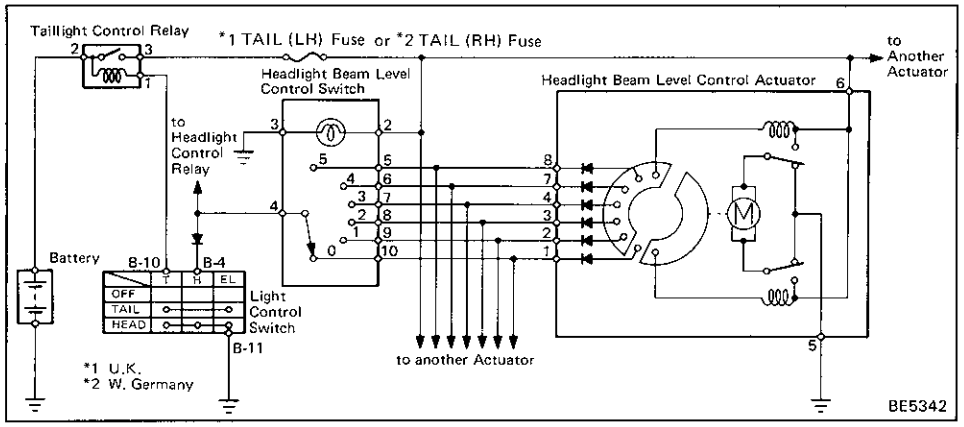

- Continuity always exists between terminal 5 of the Headlight Beam Level Control Actuator (hereafter called "Actuator") and the ground.
- When the Light Control Switch is turned to HEAD position, continuity is made between terminal 4 of the Headlight Beam Level Control Switch (hereafter called "Level Switch") and the ground through terminals B-4 and B-11 of the Light Control Switch. Also, continuity is made between terminal 1 of the Taillight Control Relay and the ground through terminals B-10 and B-11 of the Light Control Switch, the Taillight Control Relay is turned on, then current flows from the battery to terminal 6 of the Actuator.

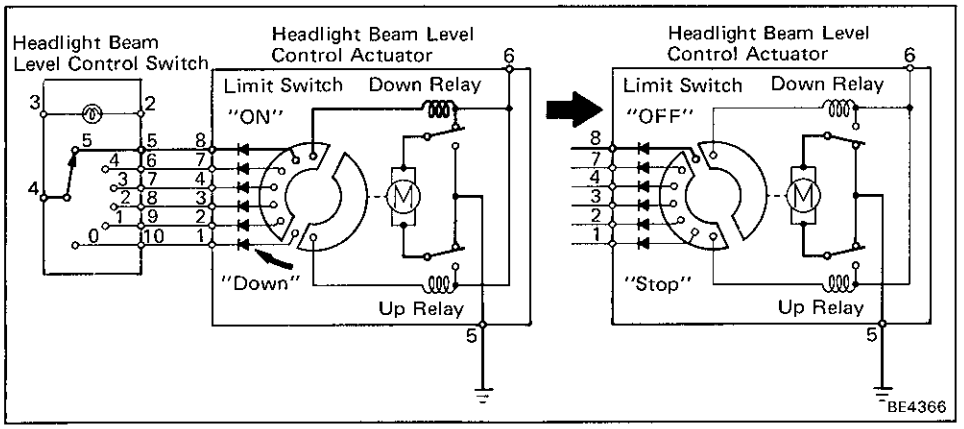

LEVEL SWITCH IN "5" POSITION

When the switch is set, Current flows from terminal 6 of Actuator → terminal 8 of the Actuator → terminal 5 of the Level Switch → ground, and the Down Relay is activated. Then current flows from terminal 6 of the Actuator → Down Relay → Motor → Up Relay → terminal 5 of the Actuator → ground, and the Motor operates to lower the headlight. When the headlights are lowered, the Limit Switch operates, so that continuity between terminals 6 and 8 of the Actuator is broken. As a result, the Down Relay is open and the headlights stay in level "5" position.

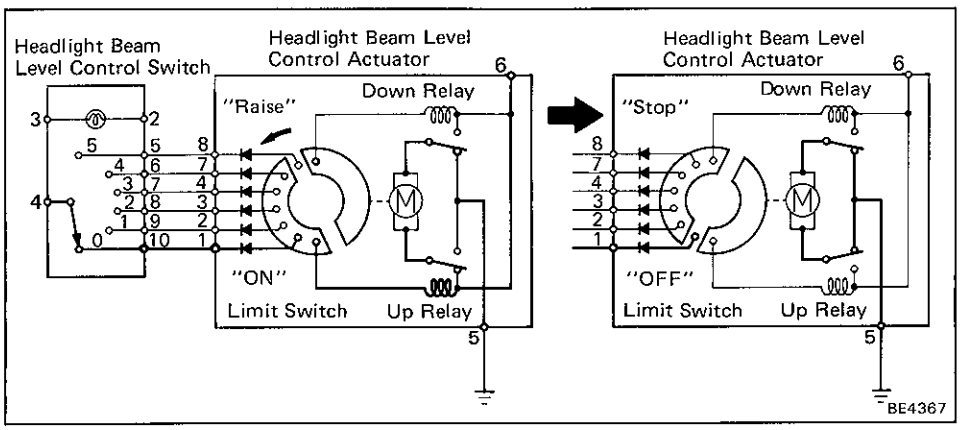

LEVEL SWITCH IN "0" POSITION

When the switch is set, current flows from terminal 6 of Actuator → terminal 1 of the Actuator → terminal 10 of the Level Switch → ground, and the Up Relay is activated. Then current flows from terminal 6 of the Actuator → Up Relay → Motor → Down Relay → terminal 5 of the Actuator → ground, and the motor operates to raise the headlight. When the headlights are raised, the Limit switch operates, so that continuity between terminals 6 and 1 of the Actuator is broken. As a result, the Up Relay is open and the headlights stay in level "0" position.

Reference: LHD Vehicles

Light Control, Headlight Dimmer and Turn Signal Switch

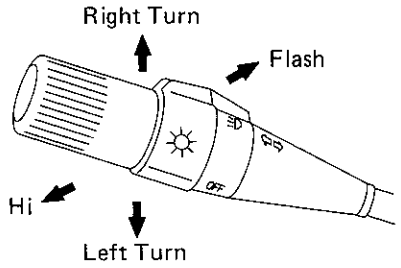

Hazard Warning Switch

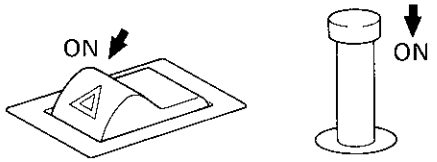

Connector "A" Connector "B"

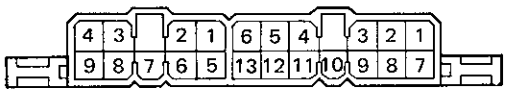

Reference: For RHD vehicles, the switch is always symmetrically opposite to LHD vehicles.

BE5345
BE5346
BE0111

Parts Inspection

Headlight and Taillight System

1. INSPECT COMBINATION SWITCH
(Light Control Switch/Continuity)

Terminal (Color) / Switch position	B-4 (R)	B-10 (W)	B-11 (W)
OFF			
TAIL		○—○	
HEAD	○—	○—	○

(Headlight Dimmer Switch/Continuity)

Terminal (Color) / Switch position	B-5 (R-Y)	B-6 (R-G)	B-12 (R-W)	B-13 (W-B)
Flash	○		○	○
Low beam		○		○
High beam	○			○

(Turn Signal Switch/Continuity)

Terminal (Color) / Switch position	B-2 (G-L)	B-3 (G-W)	B-7 (G)	B-8 (G-Y)	B-9 (G-B)
Left turn	○	○	○		○
Neutral	○		○		
Right turn	○	○	○	○	

(Hazard Warning Switch/Continuity)

Terminal (Color) / Switch position	B-1 (G-O)	B-2 (G-L)	B-3 (G-W)	B-7 (G)	B-8 (G-Y)	B-9 (G-B)
OFF		○		○		
ON	○			○		
			○		○	○

If continuity is not as specified, replace the switch.

2. INSPECT RELAYS
(Headlight Control Relay/Continuity)

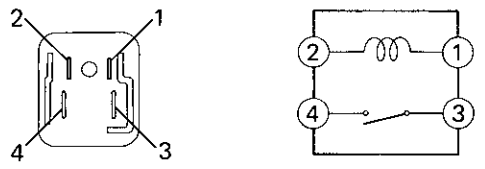

BE1838 BE1840

Terminal / Condition	1	2	3	4
Constant	○—∿∿—○			
Apply battery voltage to terminals 1 and 2.			○	○

(Taillight Control Relay/Continuity)

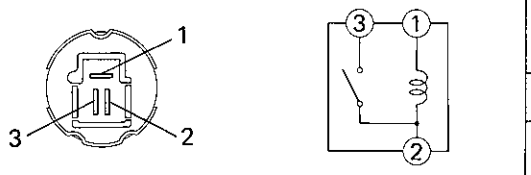

Terminal / Condition	1	2	3
Constant	○—∿—○		
Apply battery voltage to terminals 1 and 2.		○—○	

(Headlight Dimmer Relay/Continuity)

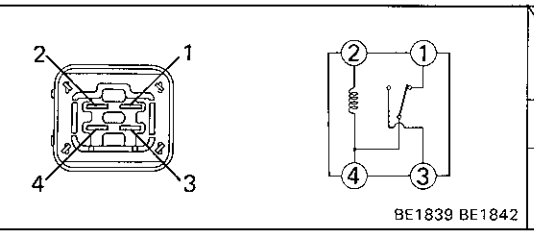

Terminal / Condition	1	2	3	4
Constant	○	○	∿	○
Apply battery voltage to terminals 2 and 4.		○	○	○

If continuity is not as specified, replace the relay.

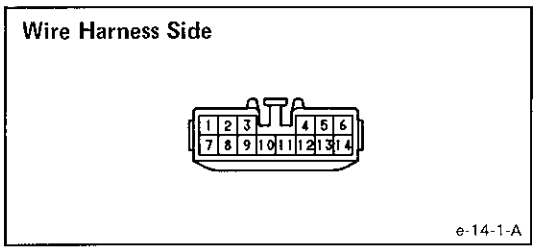

Daytime Running Light System

Inspect Daytime Running Light Relay

(Relay Circuit)

Disconnect the connector from the relay and inspect the connector on the wire harness side as shown in the chart.

Check for	Tester connection	Condition		Specified value
Continuity	2 — Ground	Light control switch position	OFF	No continuity
			TAIL or HEAD	Continuity
	4 — Ground	Light control switch position	OFF or TAIL	No continuity
			HEAD	Continuity
	6 — Ground	Headlight dimmer switch position	Low beam or High beam	No continuity
			Flash	Continuity
	7 — Ground 10 — Ground	Constant		Continuity
	13 — Ground	Headlight dimmer switch position	Low beam	No continuity
			High beam or Flash	Continuity
Voltage	1 — Ground	Ignition switch position	LOCK or ACC	No voltage
			ON	Battery voltage
	3 — Ground 5 — Ground	Constant		Battery voltage
	8 — Ground	Engine	Stop	No voltage
			Running	Battery voltage
	11 — Ground	Constant		No voltage
		Ground terminal 3		Battery voltage
	12 — Ground	Constant		Battery voltage
	14 — Ground	Constant		No voltage
		Ground terminal 5		Battery voltage

If circuit is as specified, inspect relay operation on next page.

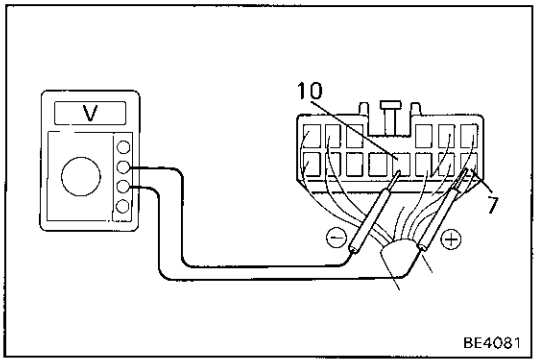

(Relay Operation)

(a) Connect the positive (+) lead from the voltmeter to terminal 7 and negative (—) lead to terminal 10.

(b) Check that there is battery voltage with light control switch is turned on.

If operation is not as specified, replace the relay.

Front Fog Light System

INSPECT FRONT FOG LIGHT SWITCH (Continuity)

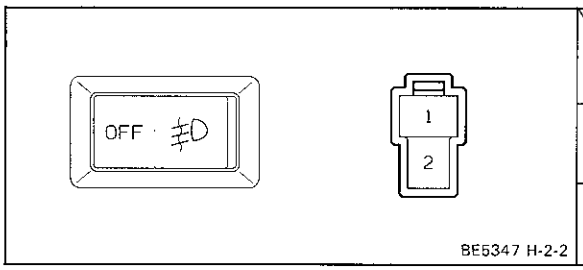

Terminal / Switch position	1	2
OFF		
ON	○——	——○

If continuity is not as specified, replace the switch.

Rear Fog Light System

1. INSPECT REAR FOG LIGHT SWITCH (Continuity)

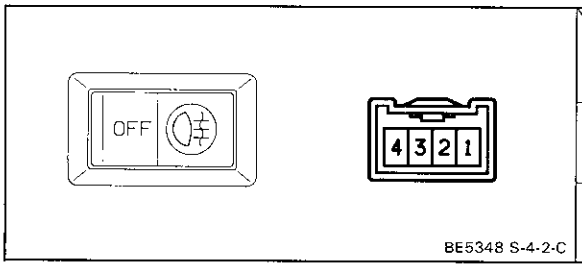

Terminal / Switch position	1	2	3	4
OFF			○—◎	◎—○
ON	○——	——○	○—◎	◎—○

If continuity is not as specified, replace the switch.

2. INSPECT REAR FOG LIGHT RELAY (Continuity)

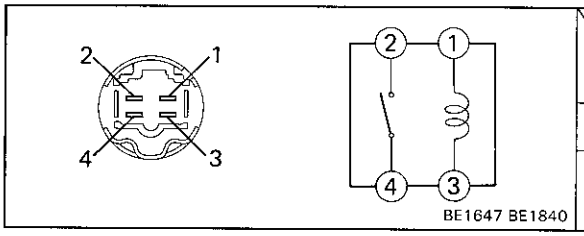

Terminal / Condition	1	2	3	4
Constant	○—∿	∿—○		
Apply battery voltage to terminals 1 and 3.		○——		——○

If continuity is not as specified, replace the relay.

Turn Signal and Hazard Warning System

1. INSPECT SWITCHS

(Turn Signal Switch/Continuity)

See Combination Switch on page BE-29.

(Hazard Warning Switch/Continuity)

See Combination Switch on page BE-29.

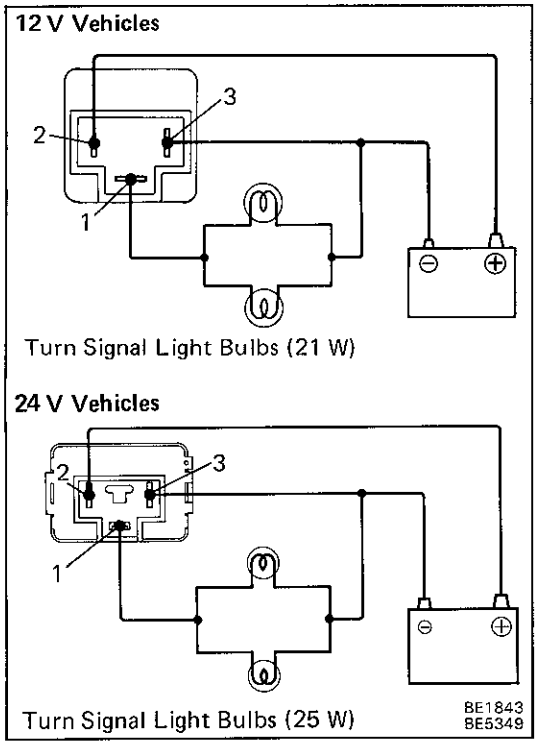

2. INSPECT TURN SIGNAL FLASHER (Operation)

HINT: The number in brackets ( ) applies to 24V vehicles.

(a) Connect the positive (+) lead from the battery to terminal 2 and the negative (—) lead to terminal 3.

(b) Connect the two turn signal light bulbs parallel to each other to terminals 1 and 3, check that the bulbs flash.

HINT: The turn signal lights should flash 60 to 120 times per minute.

If one of the front or rear turn signal bulbs has an open circuit, flash rate will be more than 140 (120) times per minute.

If operation is not as specified, replace the flasher.

3. INSPECT RED HAZARD INDICATOR RELAY (Continuity)

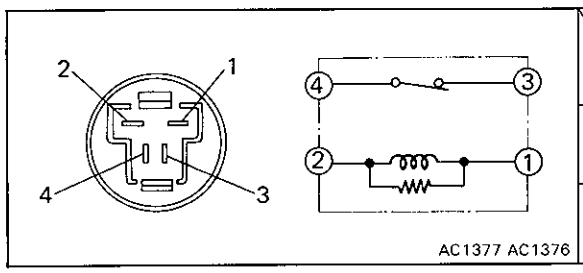

Terminal / Condition	1	2	3	4
Constant				
Apply battery voltage to terminals 1 and 2.			No continuity	

If continuity is not as specified, replace the switch.

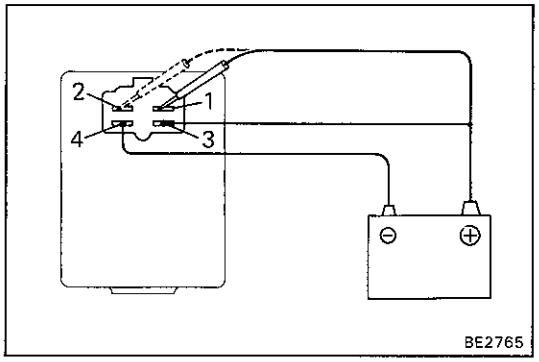

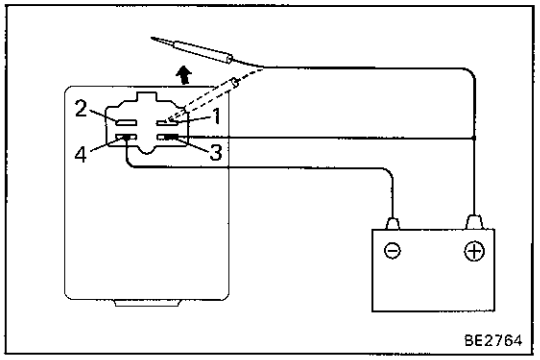

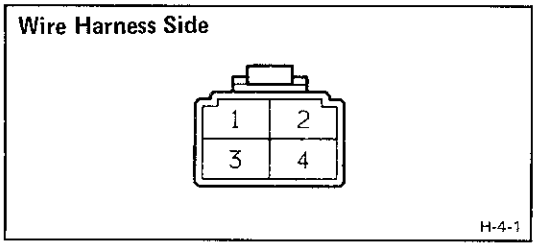

Lights-On Warning System

1. INSPECT LIGHT REMAINDER RELAY

(Operation)

(a) Connect the positive (+) lead from the battery to terminal 3 and the negative (—) lead to terminal 4.

(b) Check that the buzzer does not sound when connected terminal 1 or 2 from the positive (+) lead.

(c) Check that the buzzer sounds when disconnecting terminal 1 or 2 from the positive (+) lead.

If operation is not as specified, replace the relay.

(Relay Circuit)

Disconnect the connector from the relay and inspect the connector on the wire harness side as shown in the chart.

Check for	Tester connection	Condition		Specified value
Continuity	4 — Ground	Driver's door position	Closed (Courtesy switch OFF)	No continuity
			Opened (Courtesy switch ON)	Continuity
Voltage	1 — Ground	Ignition switch position	LOCK or ACC	No voltage
			ON	Battery voltage
	2 — Ground	Engine	Stop	No voltage
			Running	Battery voltage
	3 — Ground	Light Control Switch	OFF	No voltage
			TAIL or HEAD	Battery voltage

If circuit is as specified, replace the relay.

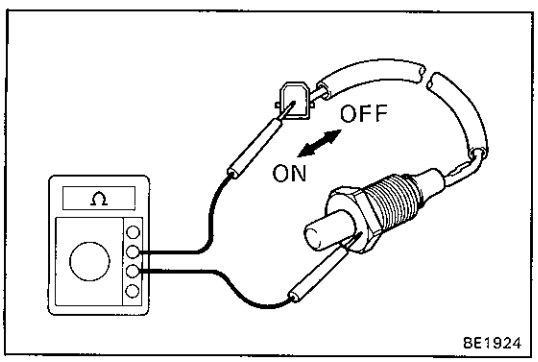

2. INSPECT DRIVER'S DOOR COURTESY SWITCH

(w/o Open Door Warning System)

(a) Check that there is continuity between terminal and the switch body with the switch ON (switch pin released).

(b) Check that there is no continuity between terminal and the switch body with the switch OFF (switch pin pushed in).

If operation is not as specified, replace the switch.

(w/ Open Door Warning System)

See Open Door Warning System on page BE-65.

Headlight Beam Level Control System

1. INSPECT SWITCH (Continuity)

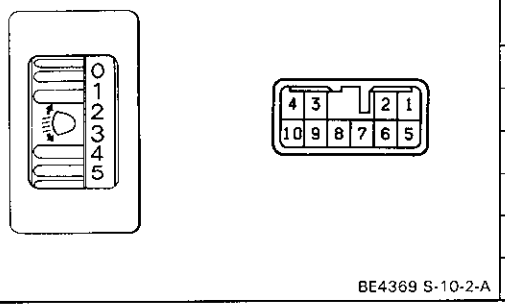

Terminal / Switch position	4	5	6	7	8	9	10	Illumination 2	Illumination 3
"0"	○						○		
"1"	○					○			
"2"	○				○				
"3"	○			○					
"4"	○		○						
"5"	○	○							

If continuity is not as specified, replace the switch.

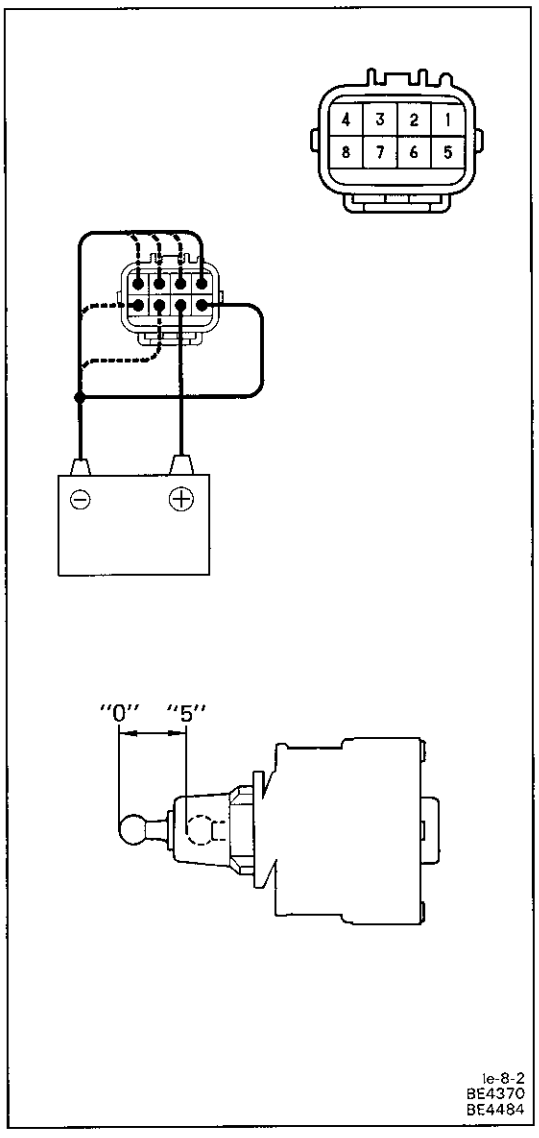

2. INSPECT ACTUATOR

(a) Connect the positive (+) lead from the battery to terminal 6 and the negative (−) lead to terminal 5.

(b) Ground each terminal and check that each mode operates as shown in the chart and illustration.

Terminal	Headlight Beam Level
1 — ground	"0"
2 — ground	"1"
3 — ground	"2"
4 — ground	"3"
7 — ground	"4"
8 — ground	"5"

If operation is not as specified, replace the actuator.