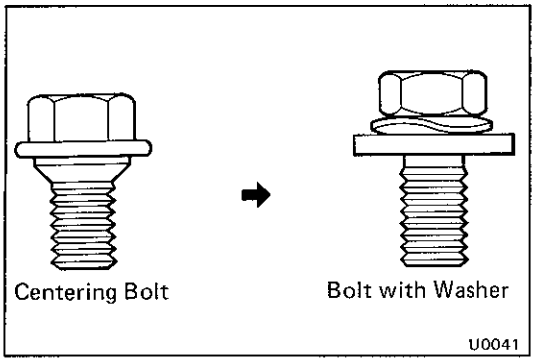

HOOD

ADJUSTMENT OF HOOD

HINT: Since the centering bolt is used as the hood hinge set bolt, the hood cannot be adjusted with it on. Substitute the bolt with the washer for the centering bolt.

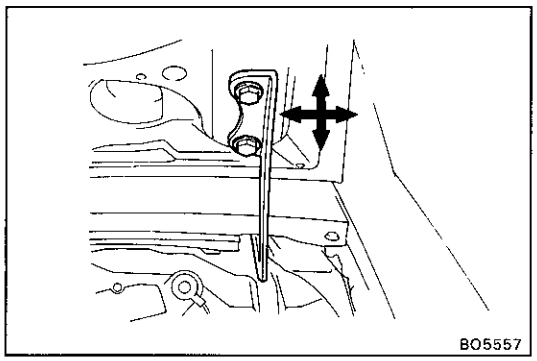

1. **ADJUST HOOD IN FORWARD/REARWARD AND LEFT/RIGHT DIRECTIONS**

   Adjust the hood by loosening the hood side hinge bolts.

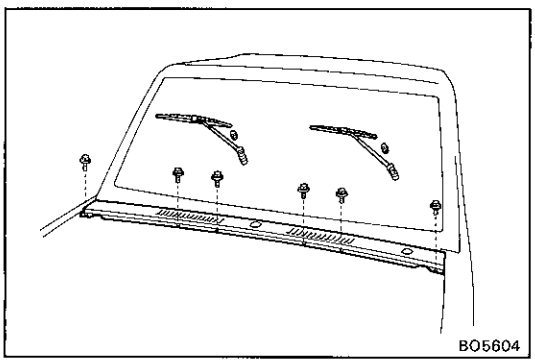

2. **ADJUST REAR EDGE OF HOOD IN VERTICAL DIRECTION**

   (a) Remove two nuts and the wiper arms.

   (b) Remove two clips, six screws and the cowl louver.

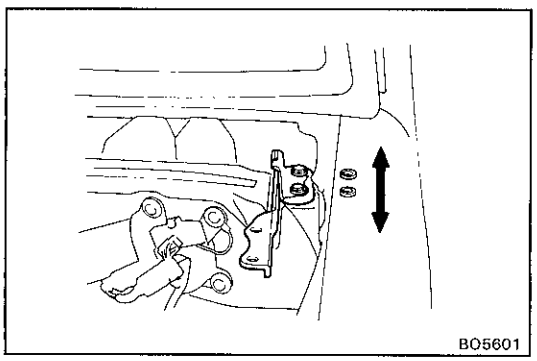

   (c) Adjust the hood by increasing or decreasing the number of the shims.

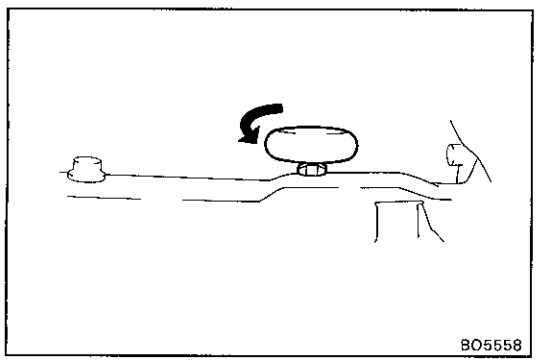

3. **ADJUST FRONT EDGE OF HOOD IN VERTICAL DIRECTIONS**

   (a) Loosen the lock nut.

   (b) Adjust the hood by turning the cushions.

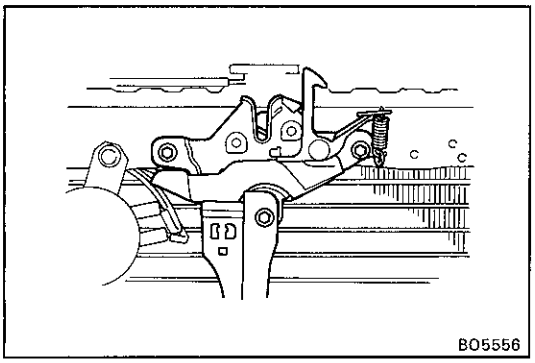

4. ADJUST HOOD LOCK

Adjust the lock by loosening bolts.