FRONT DOOR

COMPONENTS

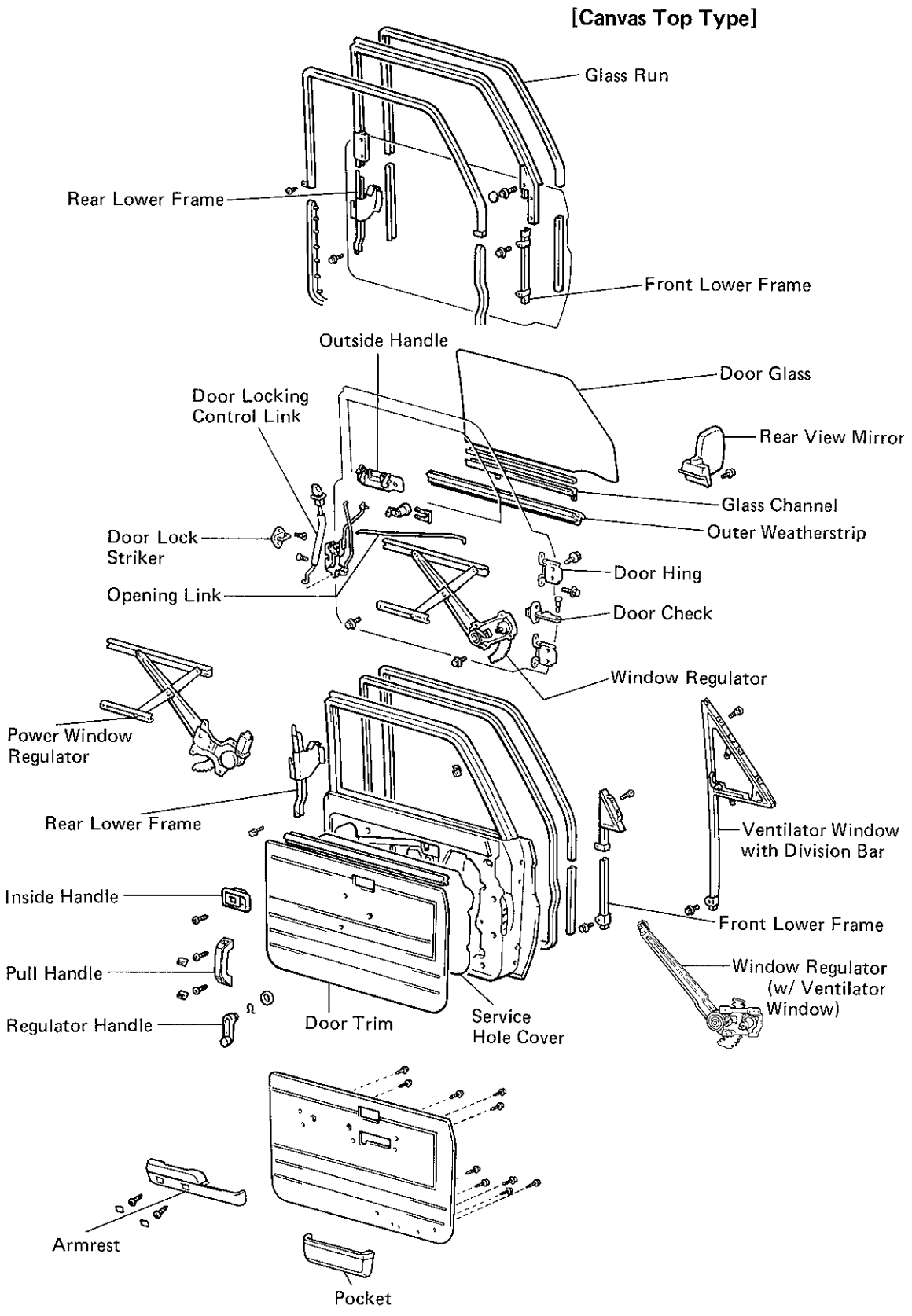

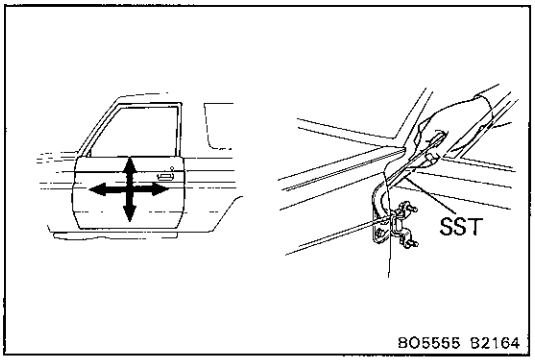

ADJUSTMENT OF FRONT DOOR

1. **ADJUST DOOR IN FORWARD/REARWARD AND VERTICAL DIRECTIONS**

   Using SST, adjust the door by loosening the body side hinge bolts.

   SST 09812-00010

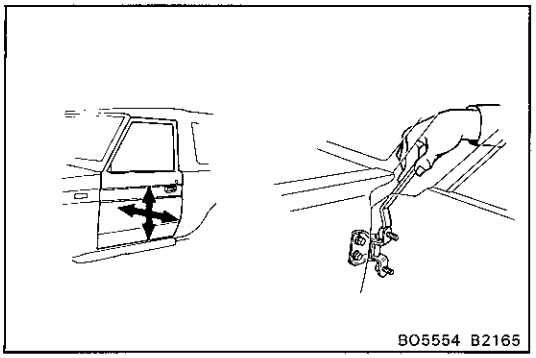

2. **ADJUST DOOR IN LEFT/RIGHT AND VERTICAL DIRECTIONS**

   Loosen the door side hinge bolts to adjust.

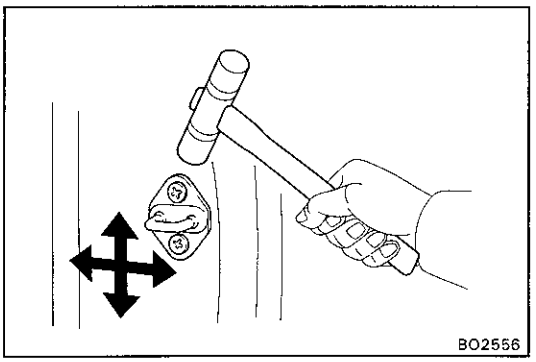

3. **ADJUST DOOR LOCK STRIKER**

   (a) Check that the door fit and door lock linkages are adjusted correctly.

   (b) Adjust the striker position by slightly loosening the striker mounting screws, and hitting the striker with a hammer.

   (c) Tighten the striker mounting screws again.

DISASSEMBLY OF FRONT DOOR

(See page BO-5)

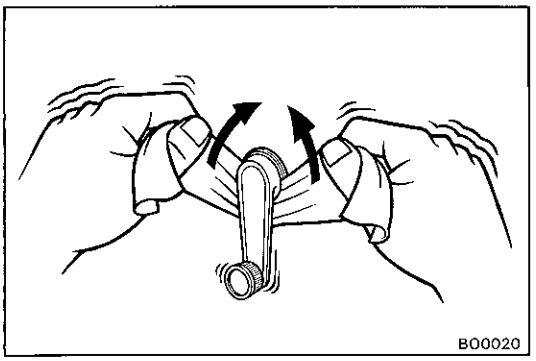

1. **(w/o Power Window)**
   REMOVE REGULATOR HANDLE

   Pull off the snap ring with a cloth and remove the regulator handle and plate.

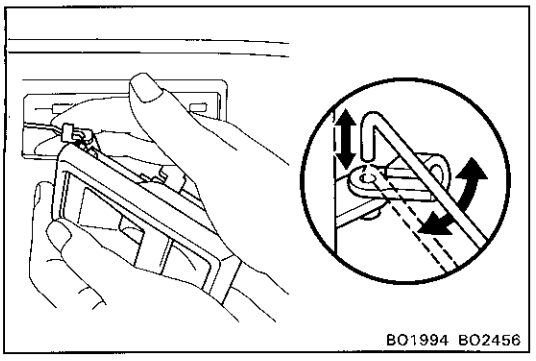

2. **REMOVE DOOR INSIDE HANDLE**

   (a) Remove the screw and slide the handle forward.

   (b) Disconnect the handle from the control link and remove the handle.

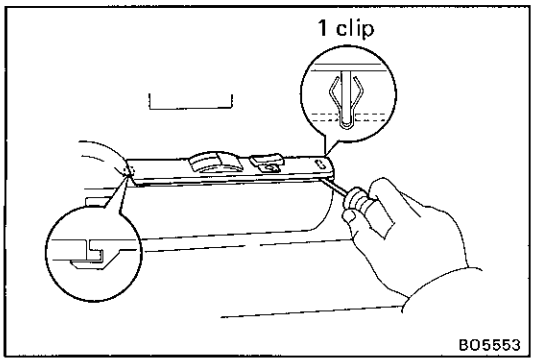

3. (w/ Power Window)
REMOVE ARMREST PANEL BASE UPPER

(a) Insert the screwdriver between the armrest and the armrest panel to pry out.

HINT: Tape the screwdriver tip before use.

(b) Slide the armrest panel forward to remove it, then disconnect the connector.

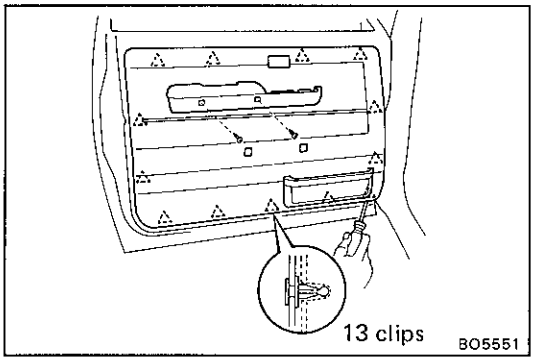

4. **REMOVE DOOR TRIM**

(a) (w/o Power Window)
Remove two screws and the armrest or remove two caps and remove the pull handle with two screws.

(b) (w/ Power Window)
Remove two caps and two screws from the armrest.

(c) (w/ Canvas Top)
Remove the screw and the service cover.

(d) Insert the screwdriver between the door and the door trim to pry out.

HINT: Tape the screwdriver tip before use.

(e) Remove the door trim.

(f) (w/ Power Window)
Remove five screws and the armrest from the door trim.

(g) Remove five screws and the door pocket from the door trim.

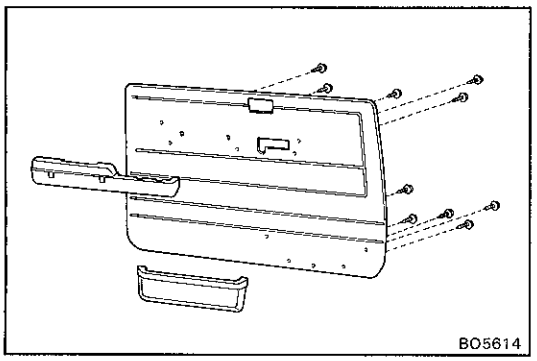

5. **REMOVE REAR VIEW MIRROR**

Remove two screws and the mirror.

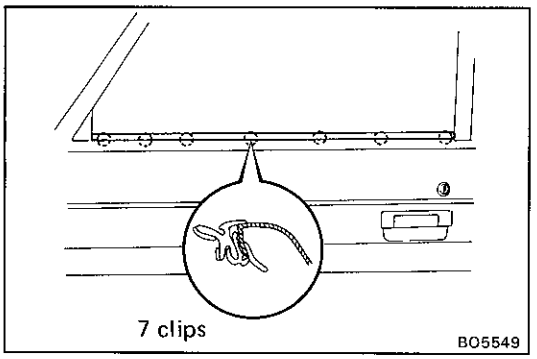

6. **REMOVE OUTER WEATHERSTRIP**

Pry loose the clips from the edge of the panel and remove the outer weatherstrip.

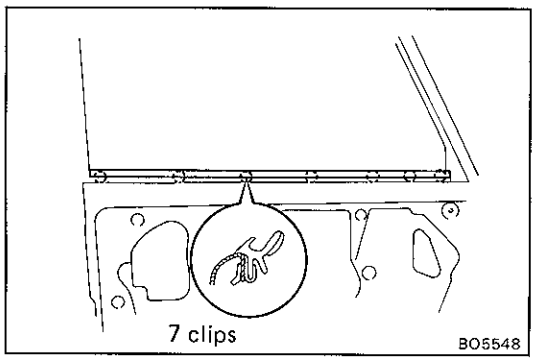

7. **REMOVE INNER WEATHERSTRIP**

Pry loose the clips from the edge of the panel and remove the inner weatherstrip.

8. (w/ Power Window)
REMOVE DOOR LOCK CONTROL RELAY

Remove three bolts and the relay.

9. **REMOVE SERVICE HOLE COVER**

10. **REMOVE GLASS RUN**

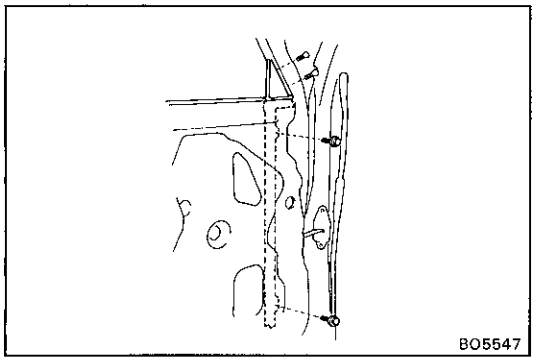

11.-1 **(w/o Ventilator Window)**
REMOVE FRONT LOWER FRAME

(w/ Canvas Top)
Remove two bolts and the frame.

(w/o Canvas Top)
Remove two screws, two bolts and the frame.

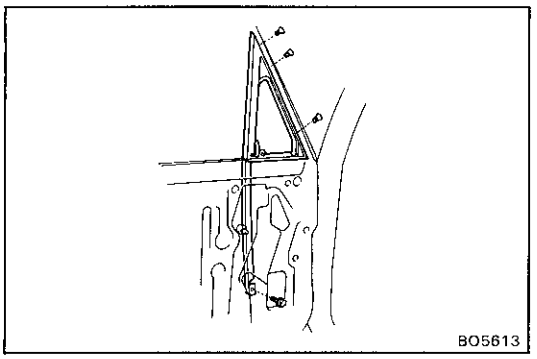

11.-2 **(w/ Ventilator Window)**
REMOVE VENTILATOR WINDOW

(a) Remove three screws and the bolt.

(b) Remove the ventilator window by pulling it upward.

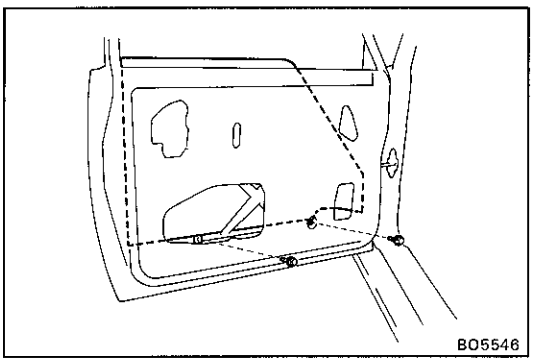

12. REMOVE DOOR GLASS

HINT: Insert a shop rag inside the panel to prevent scratching the glass.

(a) Remove two glass channel mounting bolts.

(b) Remove the door glass by pulling it upward.

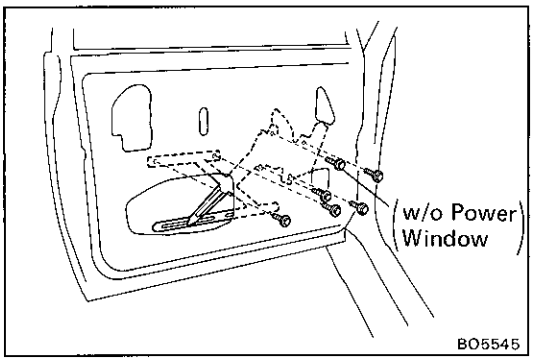

13. REMOVE WINDOW REGULATOR

(a) (w/o Ventilator Window)
Remove two equalizer arm bracket mounting bolts.

(b) (w/ Power Window)
Remove four regulator mounting bolts, then disconnect the connector.

(w/o Power Window)
Remove three regulator mounting bolts.

(c) Remove the regulator through the service hole.

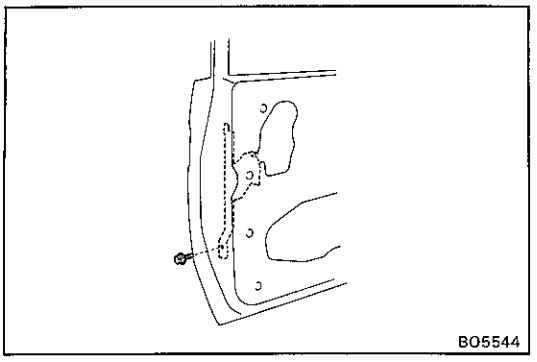

14. REMOVE REAR LOWER FRAME

Remove the bolt and the frame.

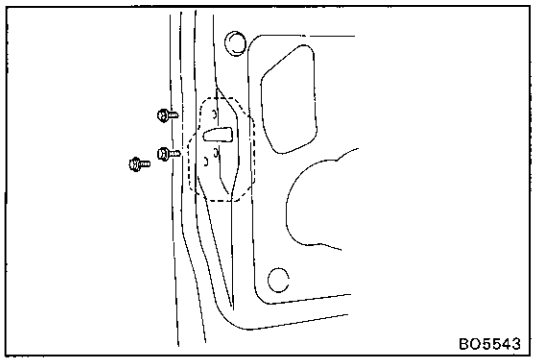
BO5543

15. REMOVE DOOR LOCK

(a) Disconnect the links from the outside handle and the lock cylinder.

(b) Remove the lock knob.

(c) (w/ Power Door Lock)
Disconnect the connector.

(d) Remove three screws.

(e) Remove the door lock through the service hole.

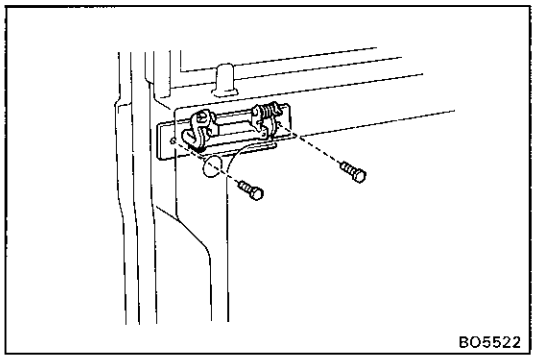
BO5522

16. REMOVE DOOR LOCK CYLINDER

Remove the retainer and the lock cylinder.

17. REMOVE OUTSIDE HANDLE

Remove two bolts and the handle.

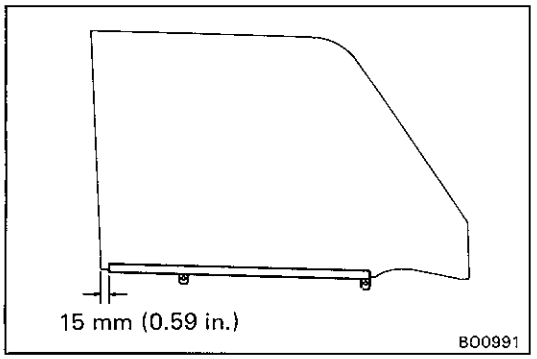

BO0991

REPLACEMENT OF GLASS

1. REMOVE GLASS CHANNEL WITH SCREWDRIVER OR LIKE OBJECT

2. APPLY SOAPY WATER TO INSIDE OF WEATHERSTRIP

3. INSTALL CHANNEL BY TAPPING IT WITH PLASTIC HAMMER

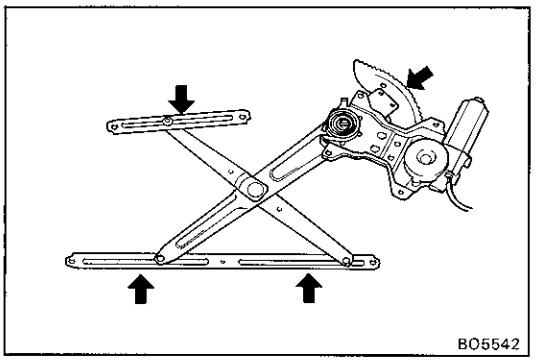
BO5542

ASSEMBLY OF FRONT DOOR

(See page BO-7)

1. BEFORE INSTALLING PARTS, COAT THEM WITH MP GREASE

(a) Apply MP grease to the sliding surface and the gears of the window regulator.

NOTICE: Do not apply MP grease to the spring of the window regulator.

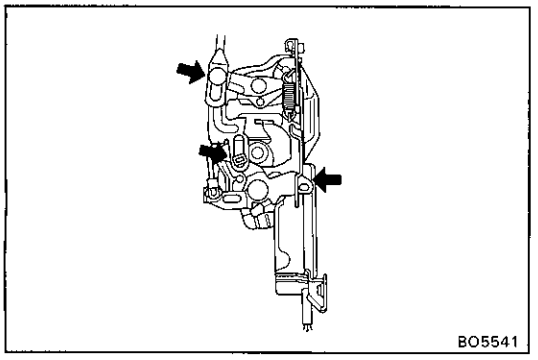
BO5541

(b) Apply MP grease to the sliding surface of the door lock.

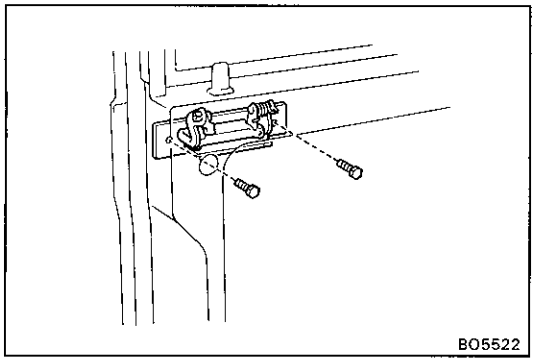

2. INSTALL OUTSIDE HANDLE

Install the handle with two bolts.

3. INSTALL DOOR LOCK CYLINDER

Install the lock cylinder with the retainer.

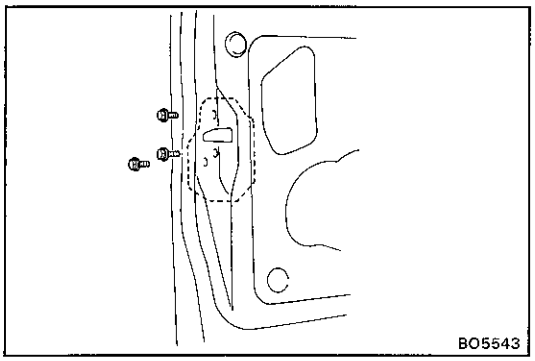

4. INSTALL DOOR LOCK

(a) Install the door lock with three screws.

(b) (w/ Power Door Lock)
Connect the connector.

(c) Connect the links to the outside handle and the lock cylinder.

(d) Install the lock knob.

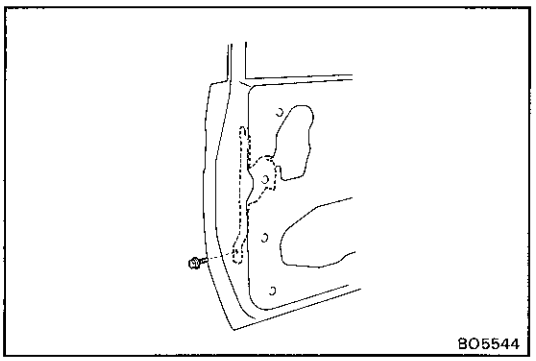

5. INSTALL REAR LOWER FRAME

Install the frame with the bolt.

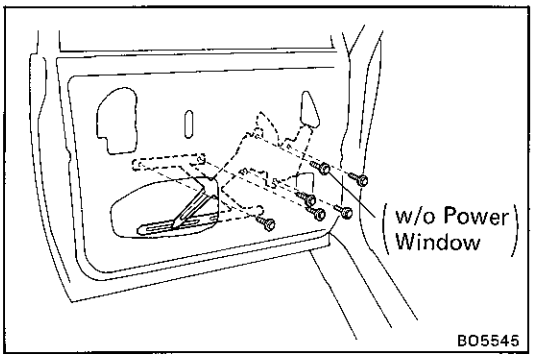

6. INSTALL WINDOW REGULATOR

(a) Place the regulator through the service hole.

(b) (w/ Power Window)
Install four regulator mounting bolts, then connect the connector.

(w/o Power Window)
Install three regulator mounting bolts.

(c) (w/o Ventilator Window)
Temporarity tighten two equalizer arm bracket bolts.

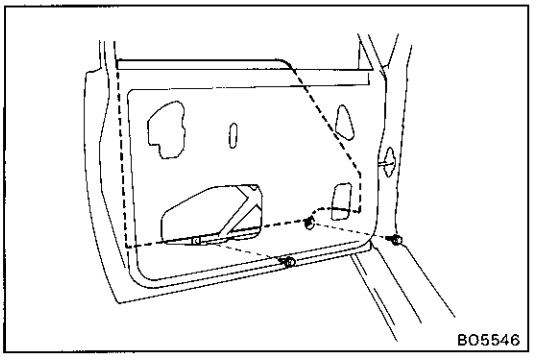

7. INSTALL DOOR GLASS

HINT: Insert a shop rag inside the panel to prevent scratching the glass.

(a) Place the glass in the door cavity

(b) Install two glass channel mounting bolts.

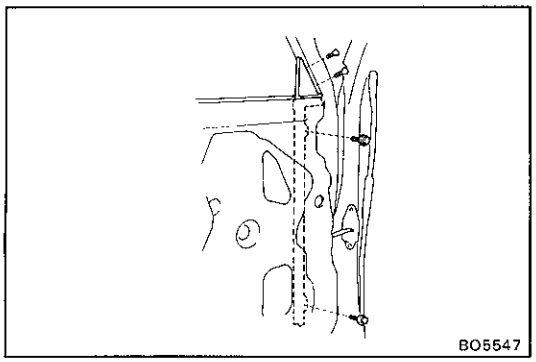

8.-1 (w/o Ventilator Window)
INSTALL FRONT LOWER FRAME

(w/ Canvas Top)
Install the frame with two bolts.

(w/o Canvas Top)
Install the frame with two screws and two bolts.

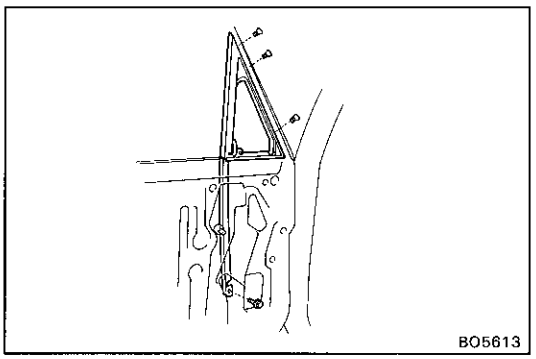

8.-2 (w/ Ventilator Window)
INSTALL VENTILATOR WINDOW

(a) Insert the ventilator window.

(b) Install three screws and the bolt.

9. INSTALL GLASS RUN

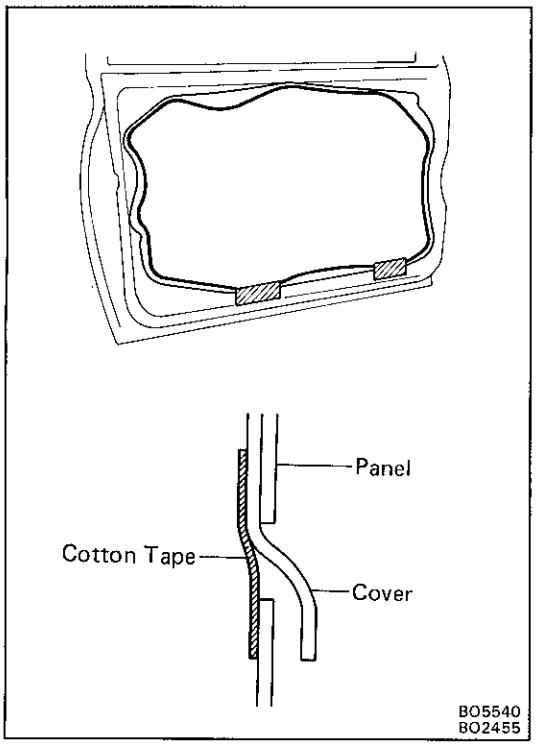

10. INSTALL SERVICE HOLE COVER

(a) Seal the service hole cover with adhesive.

(b) Insert the lower edge of the service hole cover into the panel slit.

(c) Seal the panel slit with the cotton tape.

NOTICE: Do not block the trim clip sealing with the tape.

11. (w/ Power Window)
INSTALL DOOR LOCK CONTROL RELAY

Install the relay with three bolts.

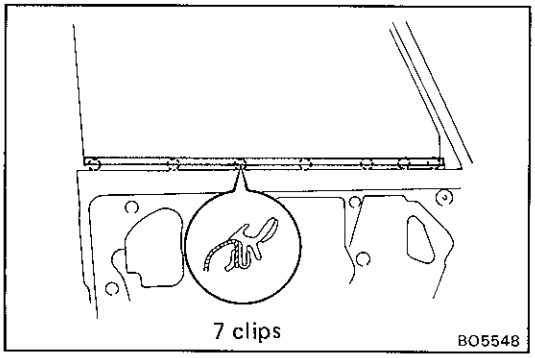

12. INSTALL INNER WEATHERSTRIP

Insert the claw of the clips into the upper panel slit and push the weatherstrip onto the panel.

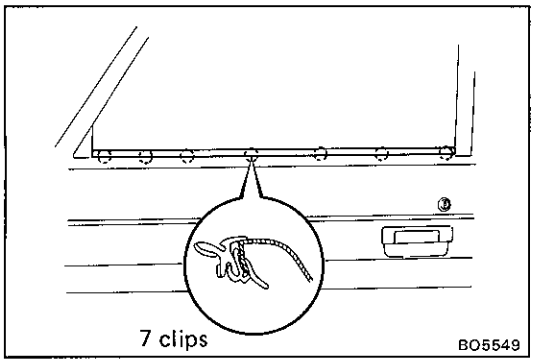

13. INSTALL OUTER WEATHERSTRIP

Insert the claw of the clips into the upper panel slit and push the weatherstrip onto the panel.

14. INSTALL REAR VIEW MIRROR

Install the mirror with two screws.

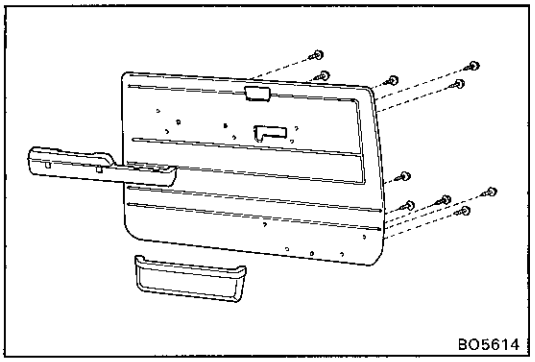

15. INSTALL DOOR TRIM

(a) Install the door pocket with five screws to the door trim.

(b) (w/ Power Window)
Install the armrest with five screws to the door trim.

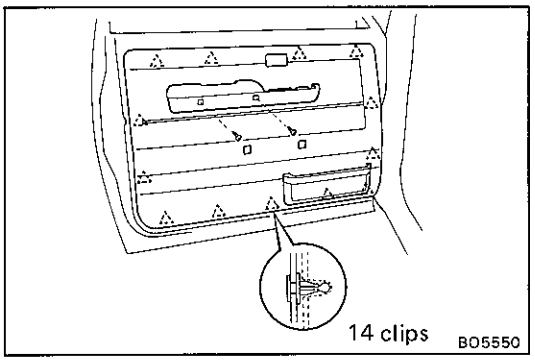

(c) Install the door trim with retainer to the inside panel by tapping.

(d) (w/ Canvas Top)
Install the service cover with the screw.

(e) (w/o Power Window)
Install the armrest with two screws or install the pull handle with two screws and two caps.

(f) (w/ Power Window)
Install two screws and two caps to the armrest.

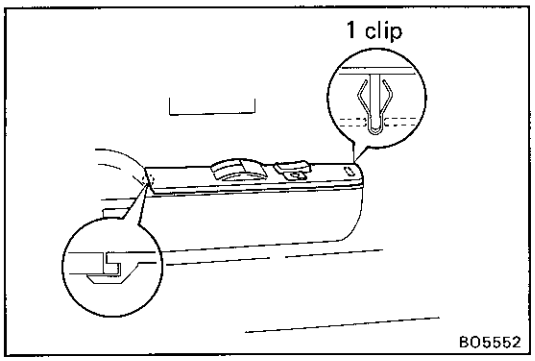

16. (w/ Power Window)
INSTALL ARMREST PANEL BASE UPPER

(a) Connect the connector.

(b) Slide the armrest panel rearward and tap the panel to install it.

17. INSTALL DOOR INSIDE HANDLE
(See step 2 on page BO-8)

(a) Connect the handle to the control link.

(b) Push the handle in the door panel and slide it rearward.

(c) Install the screw.

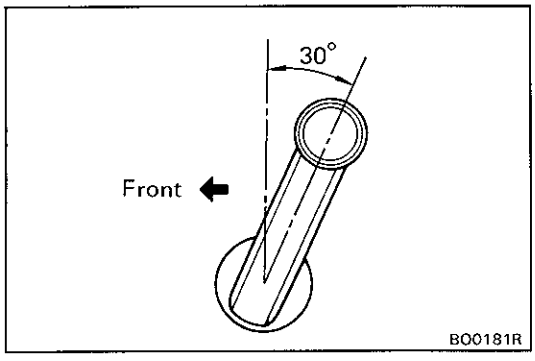

18. (w/o Power Window)
INSTALL REGULATOR HANDLE

With door window fully closed, install the plate and the regulator handle with the snap ring as shown.