INSTRUMENT PANEL

COMPONENTS

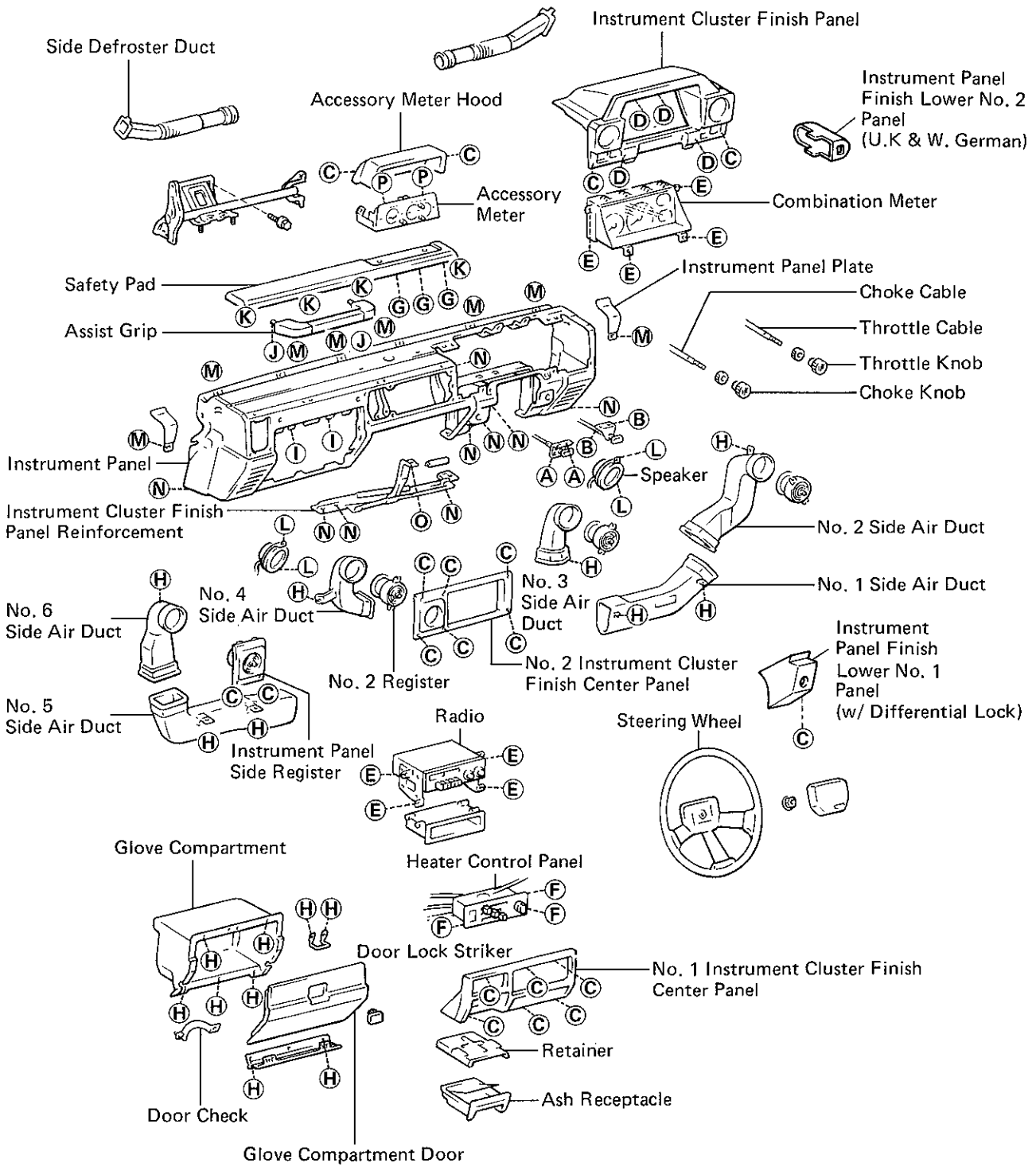

BO5700

HINT: Screw sizes in the previous illustration are indicated according to the code below.

mm (in.)

Code	Shape	Size	Code	Shape	Size	Code	Shape	Size
Ⓐ		ϕ = 6 (0.24) L = 16 (0.63)	Ⓖ		ϕ = 6 (0.24)	Ⓛ		ϕ = 6 (0.24)
Ⓑ		ϕ = 6 (0.24) L = 6 (0.63)	Ⓗ	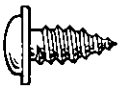	ϕ = 5 (0.20) L = 16 (0.63)	Ⓜ		ϕ = 6 (0.24) L = 20 (0.79)
Ⓒ		ϕ = 5 (0.20) L = 16 (0.63)	Ⓘ		ϕ = 6 (0.24) L = 16 (0.63)	Ⓝ		ϕ = 6 (0.24) L = 20 (0.79)
Ⓓ		ϕ = 5 (0.20) L = 25 (0.98)	Ⓙ		ϕ = 6 (0.24)	Ⓞ		ϕ = 6 (0.24) L = 10 (0.39)
Ⓔ		ϕ = 5 (0.20) L = 16 (0.63)	Ⓚ		ϕ = 6 (0.24) L = 14 (0.55)	Ⓟ	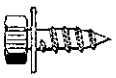	ϕ = 6 (0.24) L = 14 (0.55)
Ⓕ		ϕ = 5 (0.20) L = 12 (0.47)						

BO0960

REMOVAL OF INSTRUMENT PANEL

(See page BO-50)

1. **DISCONNECT BATTERY CABLE FROM NEGATIVE TERMINAL**

2. **REMOVE STEERING WHEEL**

3. **REMOVE STEERING COLUMN COVER**

4. **REMOVE THROTTLE CABLE**

   (a) Using a screwdriver, push in the throttle cable packing and pull off the knob.

   (b) Remove the throttle cable set nut and the cable.

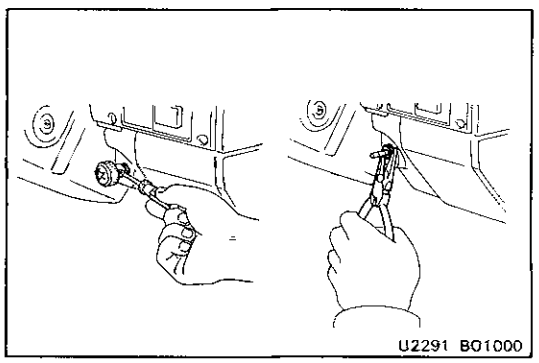

U2291 BO1000

5. **REMOVE CHOKE CABLE**

   (a) Using a screwdriver, loosen the choke knob set screw and remove the knob.

   (b) Remove the choke cable set nut and the cable.

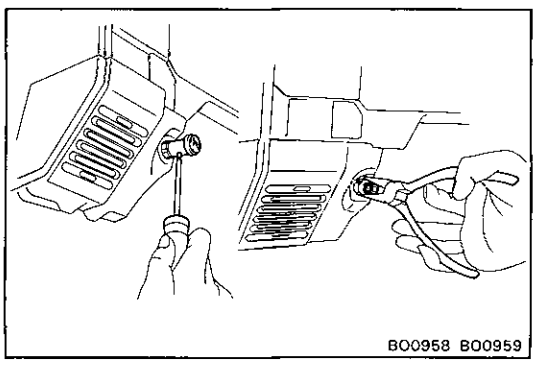

BO0958 BO0959

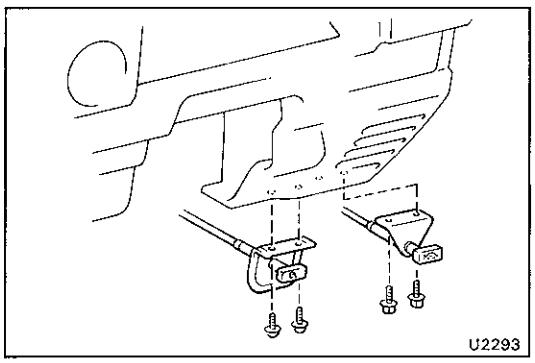

6. **REMOVE HOOD LOCK RELEASE LEVER**

7. **REMOVE FUEL LID OPENER**

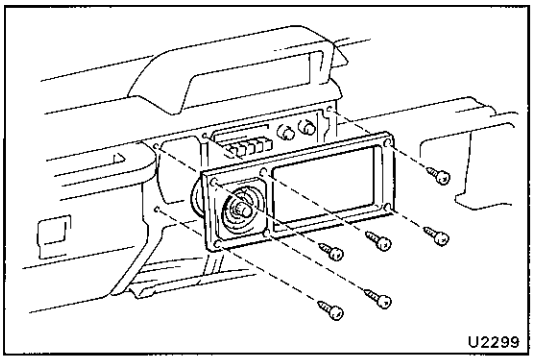

8. **REMOVE NO.2 INSTRUMENT CLUSTER FINISH CENTER PANEL**

Remove six screws and the center panel.

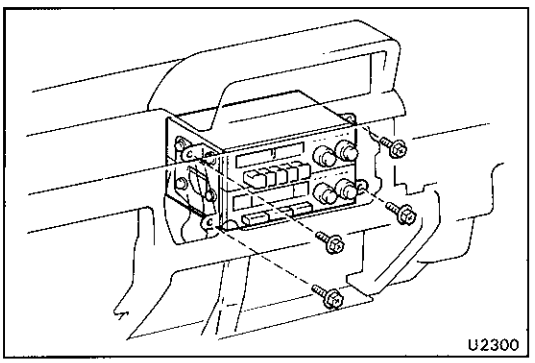

9. **REMOVE RADIO**

(a) Remove the four screws.

(b) Disconnect the connector and antenna cable, then remove the radio.

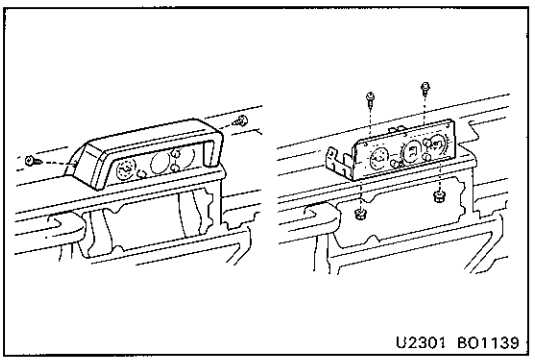

10. **REMOVE ACCESSORY METER**

(a) Remove the two screws and the hood.

(b) Disconnect the connector, then remove the two nuts and two screws.

(c) Remove the accessory meter.

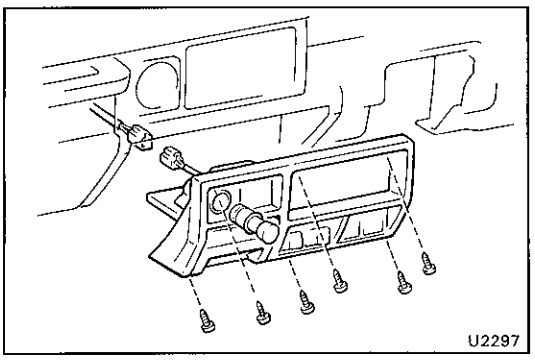

11. **REMOVE NO.1 INSTRUMENT CLUSTER FINISH CENTER PANEL**

(a) Remove the six screws.

(b) Disconnect the connectors and remove the panel.

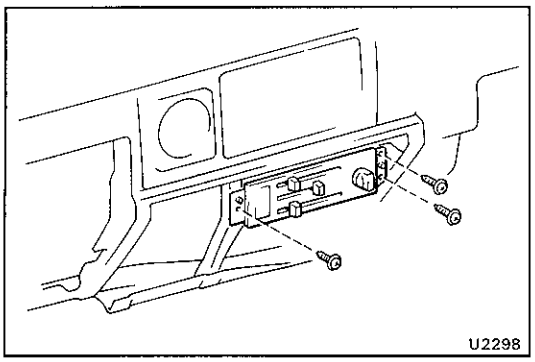

12. REMOVE HEATER CONTROL PANEL

Remove four nobes, three screws and the control panel.

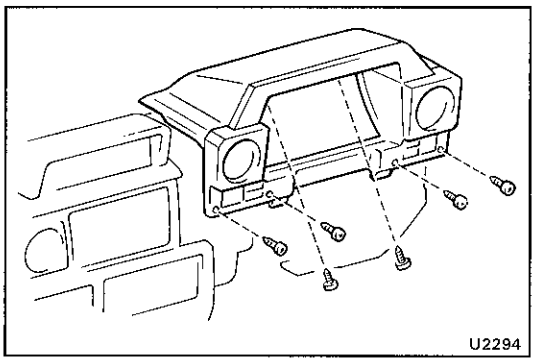

13. REMOVE INSTRUMENT CLUSTER FINISH PANEL

(a) Remove the six screws.

(b) Disconnect the connectors and warning valves, then remove the finish panel.

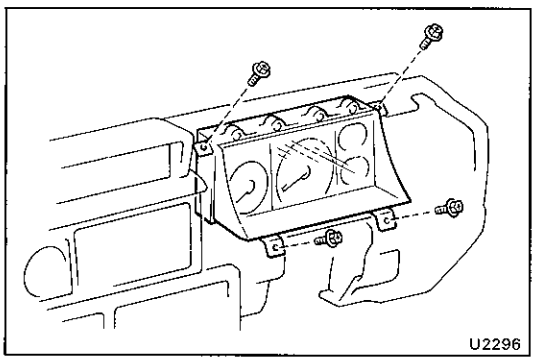

14. REMOVE COMBINATION METER

(a) Remove the four screws.

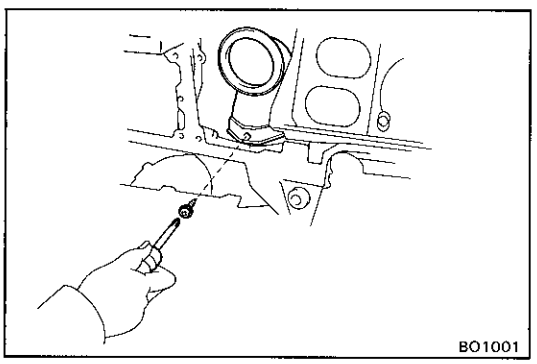

(b) Remove the No.3 side air duct.

(c) Reach in from where the No.3 side air duct has been removed and disconnect the speedometer cable and the two connectors. Remove the combination meter.

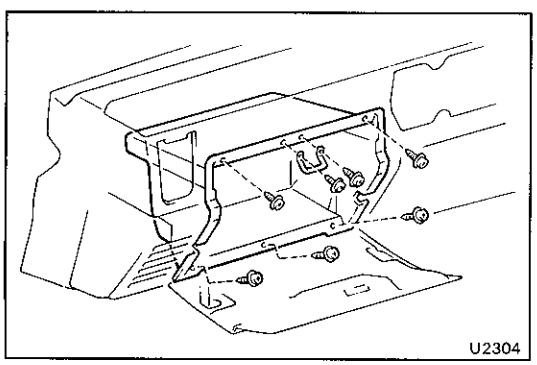

15. REMOVE GLOVE COMPARTMENT

(a) Remove the two screws and the door lock striker.

(b) Remove the five screws and the glove compartment.

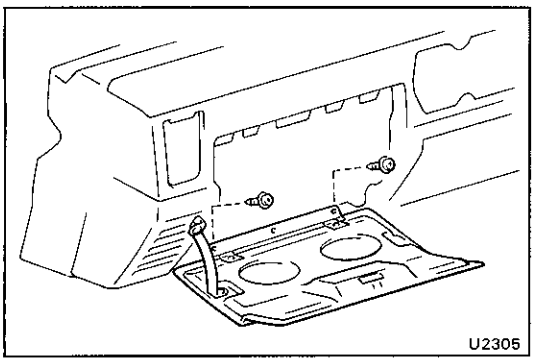

16. REMOVE GLOVE COMPARTMENT DOOR

Remove two screw and the door.

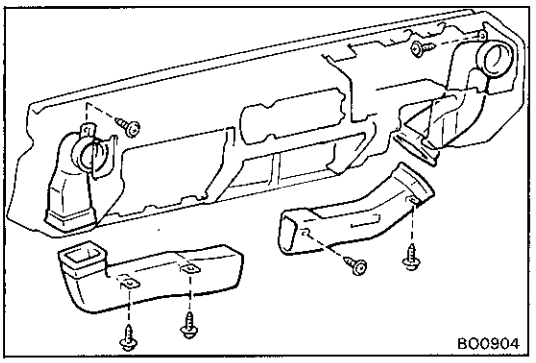

17. REMOVE SIDE AIR DUCT

HINT: The No.4 side air duct must be removed.

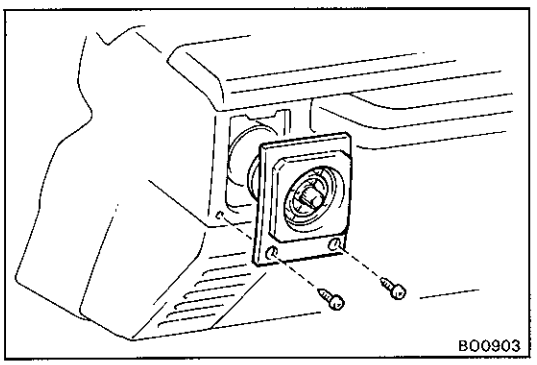

18. REMOVE INSTRUMENT PANEL SIDE REGISTER

19. REMOVE BOTH SIDE DEFROSTER DUCTS

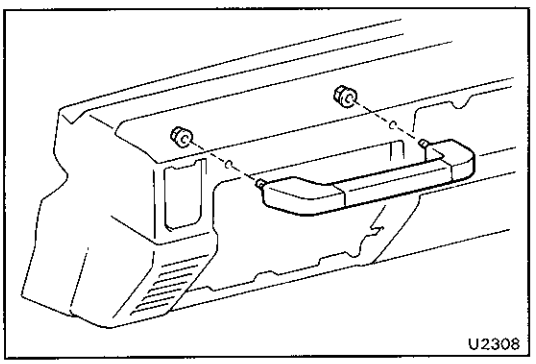

20. REMOVE ASSIST GRIP

Remove two nuts and the assist grip.

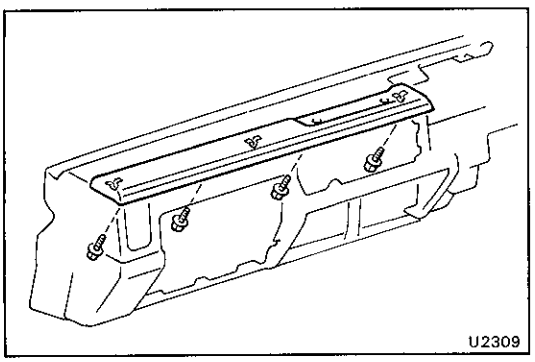

21. REMOVE SAFETY PAD

(a) Remove the four screws.

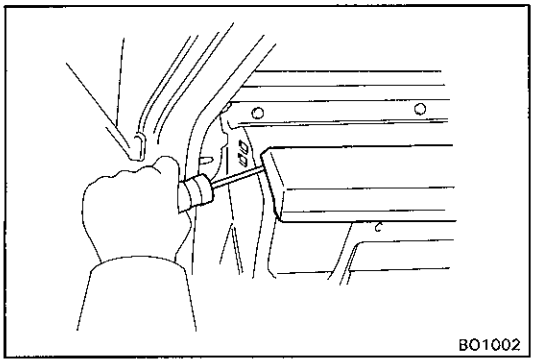

(b) Using a screwdriver, pry up the safety pad and remove it with the three clips.

HINT: Tape the screwdriver tip before use.

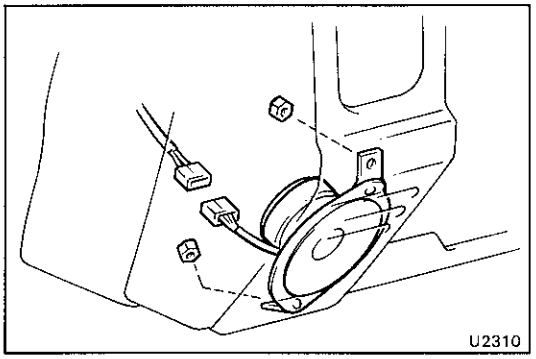

22. REMOVE BOTH SPEAKERS

(a) Disconnect the connector.

(b) Remove the two nuts and the speaker.

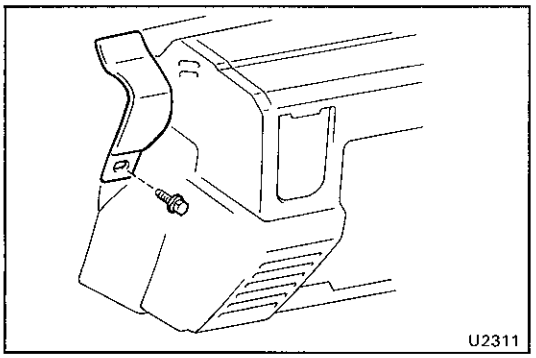

23. REMOVE BOTH INSTRUMENT PANEL PLATES

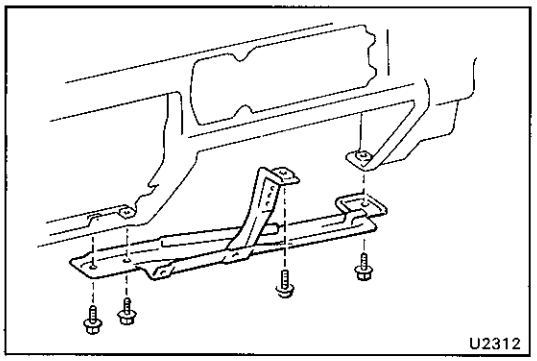

24. REMOVE INSTRUMENT CLUSTER FINISH PANEL REINFORCEMENT

Remove four bolts and the reinforcement.

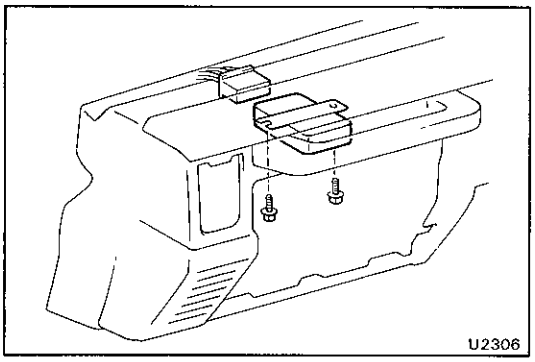

25. REMOVE INSTRUMENT PANEL

(a) Remove the following parts:

(EUR)
- Red hazard indicator relay
- Rear fog light relay
- Pre-heating timer (LJ)
- Daytime running light relay

(Saudi Arabia)
- Emission control relay

(Australia)
- Emission control relay
- Preheating timer (LJ)

(b) Remove the three wiring harness clamps from the instrument panel.

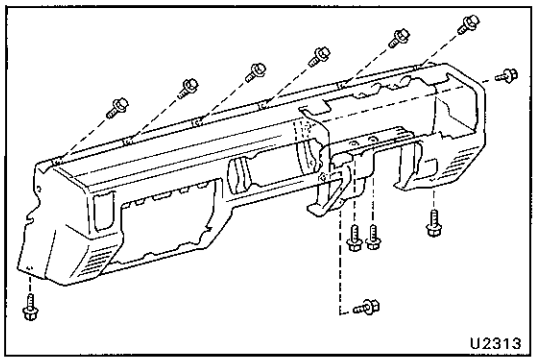

(c) Remove the steering column upper support.

(d) Remove the twelve bolts and the instrument panel.

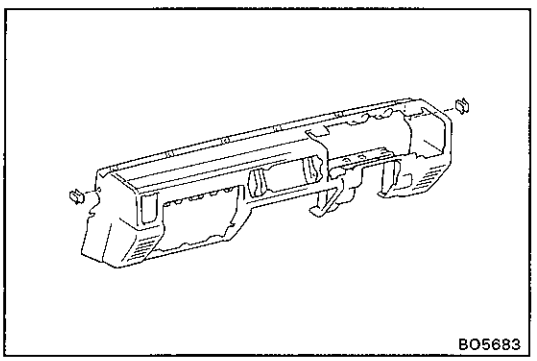

26. REMOVE TWO CLIPS FROM INSTRUMENT PANEL

INSTALLATION OF INSTRUMENT PANEL

(See page BO-50)

INSTALL INSTRUMENT PANEL IN REVERSE SEQUENCE OF REMOVAL