(G40 AND G52 TRANSMISSIONS) COMPONENTS

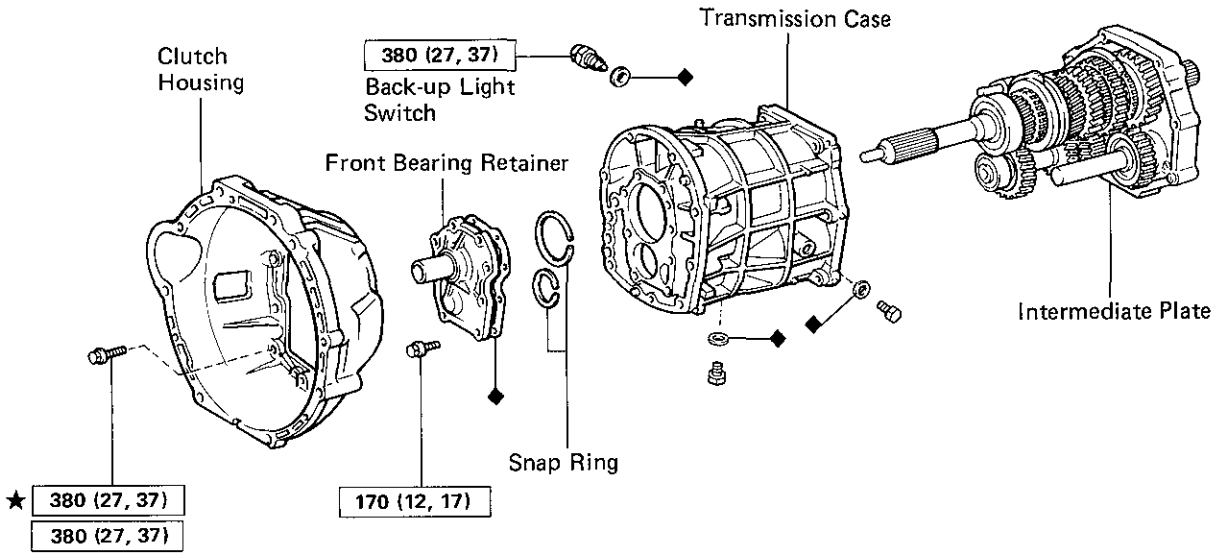

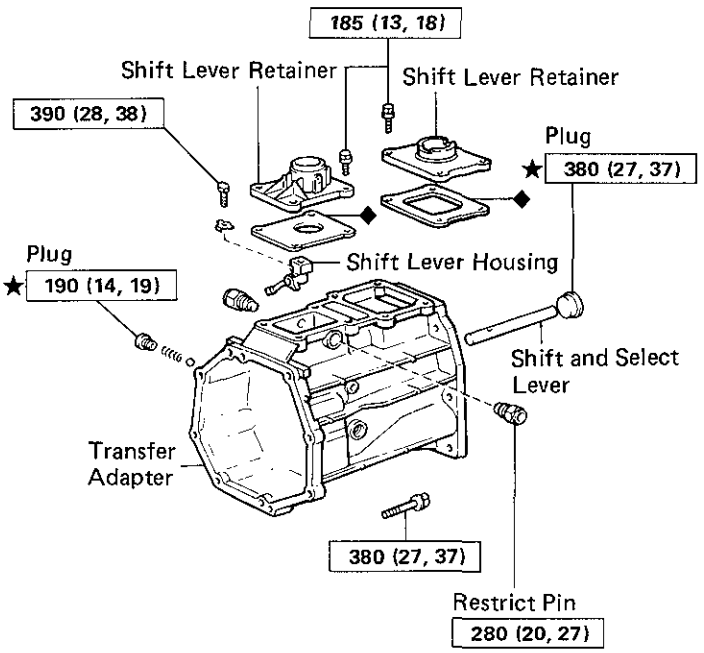

kg-cm (ft-lb, N·m) : Specified torque

◆ Non-reusable part

★ Precoated part

GM0321
GM0347

COMPONENTS (Cont'd)

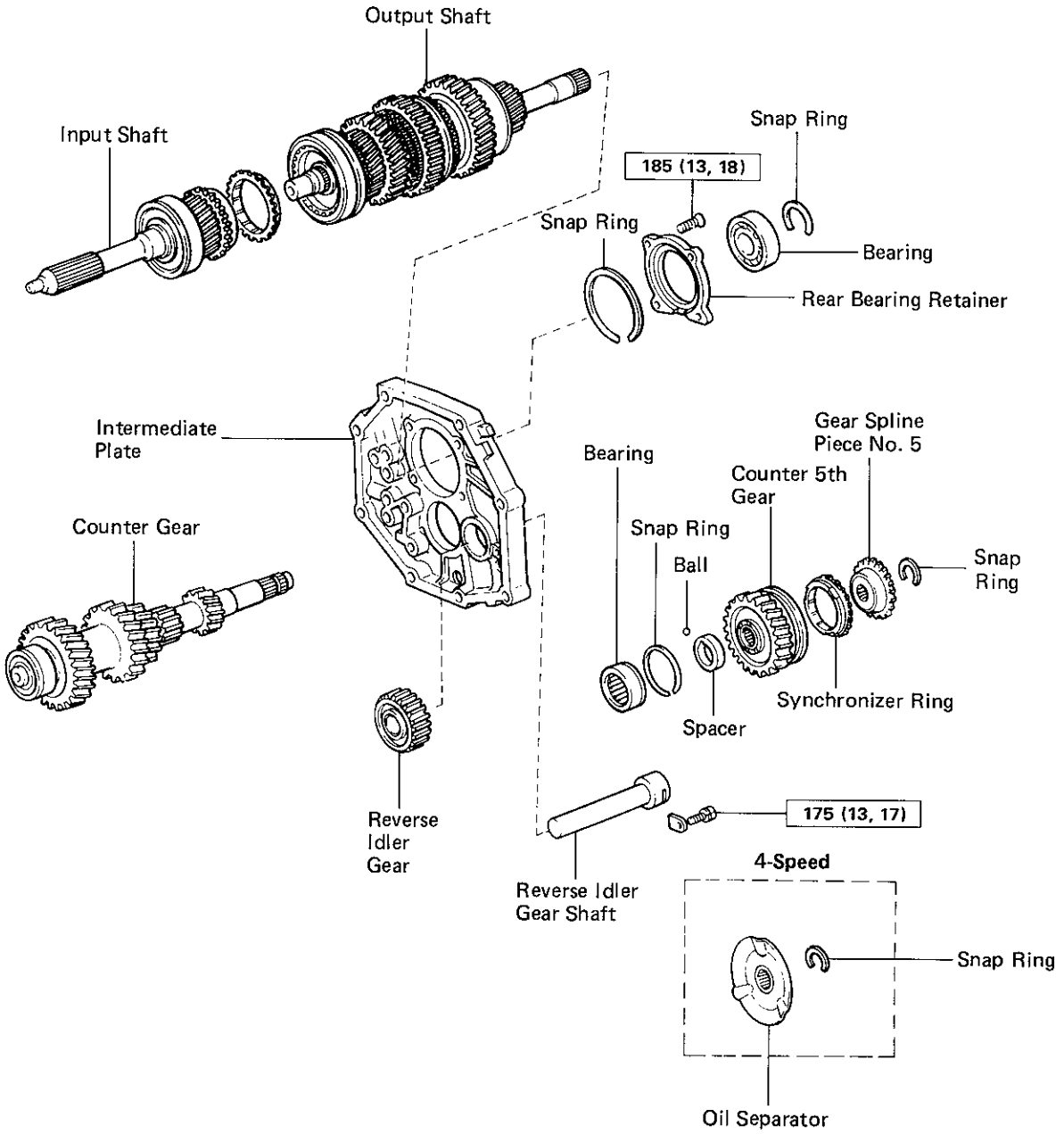

kg-cm (ft-lb, N·m) : Specified torque

GM0432

COMPONENTS (Cont'd)

5-Speed

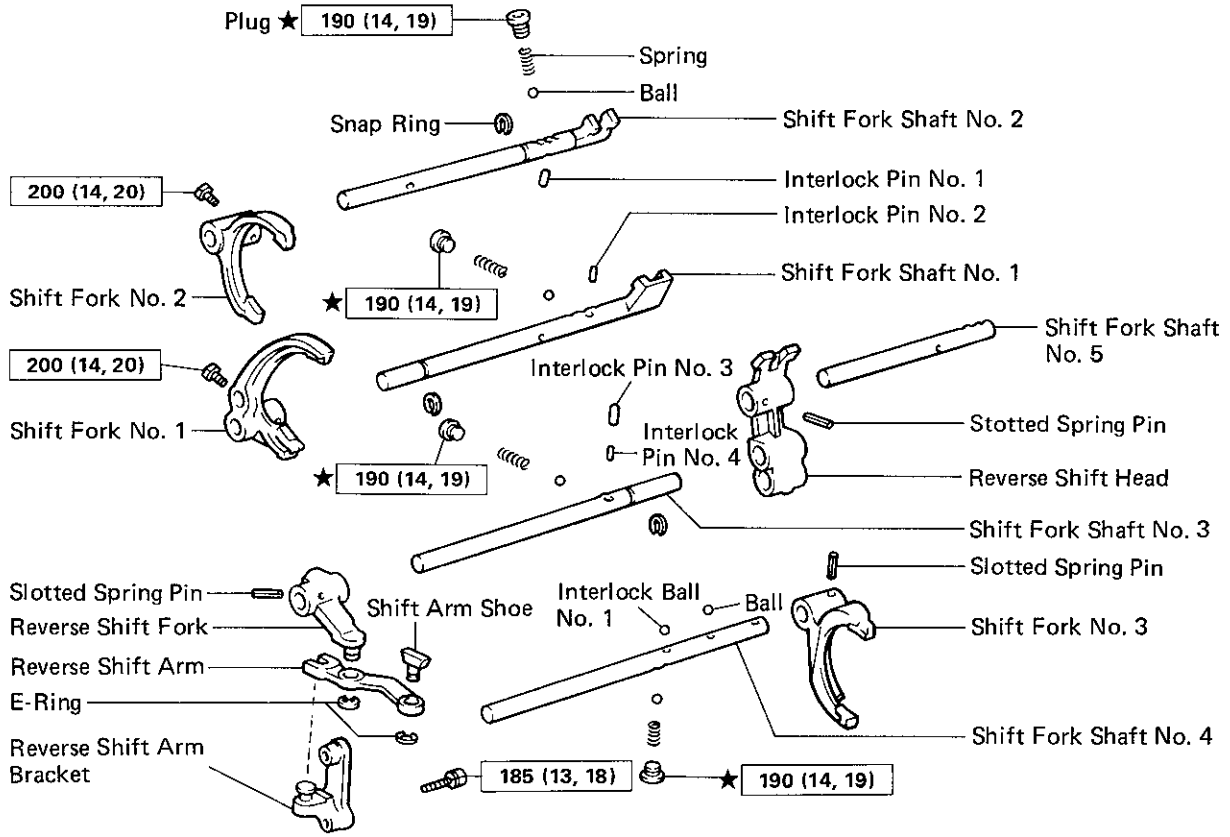

4-Speed

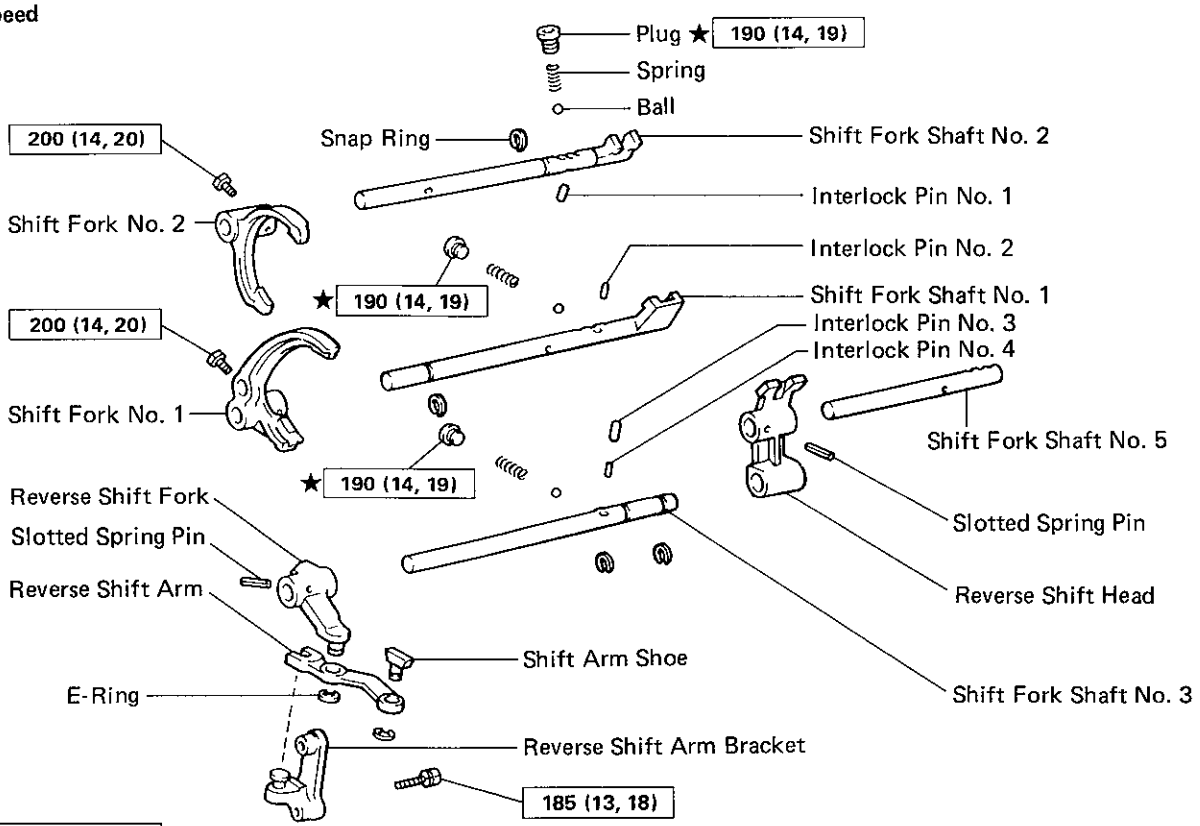

kg-cm (ft-lb, N·m) : Specified torque

★ Precoated part

GM0345
GM0346