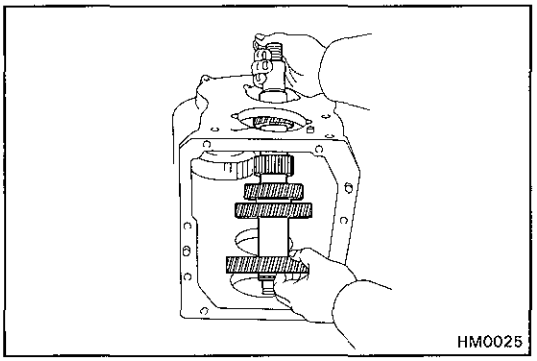

ASSEMBLY OF TRANSMISSION

(See page MT-54, 55)

1. **PUT COUNTER GEAR INTO TRANSMISSION CASE**
   (a) Stand the transmission case on its front end.
   (b) Put the counter gear into the case.
   NOTICE: Be careful not to damage either end.

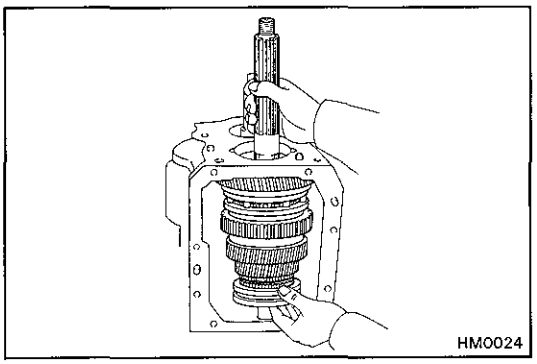

2. **PUT OUTPUT SHAFT ASSEMBLY INTO TRANSMISSION CASE**
   NOTICE: Be careful not to damage the front end of the shaft.

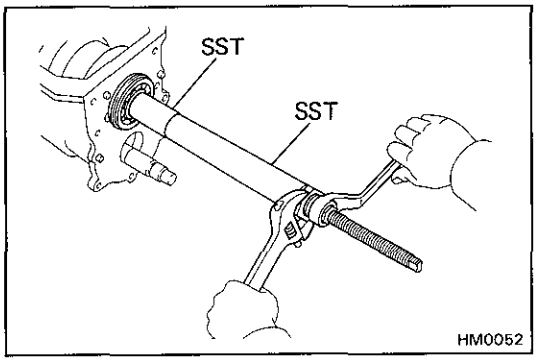

3. ***INSTALL OUTPUT SHAFT CENTER BEARING***
   (a) Using snap ring pliers, install the snap ring onto the bearing.
   (b) Confirm that the groove of the first gear thrust washer and the straight pin are aligned.
   (c) Using SST, install the bearing until it comes into contact with the first gear thrust washer.
   SST 09309-36033, 09309-60010

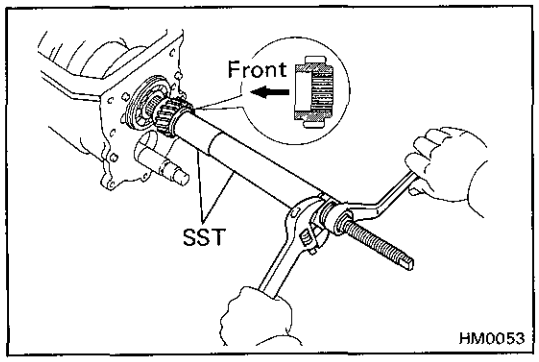

4. **(H55F)**
   INSTALL FIFTH GEAR TO OUTPUT SHAFT
   (a) Apply MP grease to the inside surface of the fifth gear.
   (b) Using SST, install the fifth gear to the output shaft.
   SST 09309-36033, 09309-60010

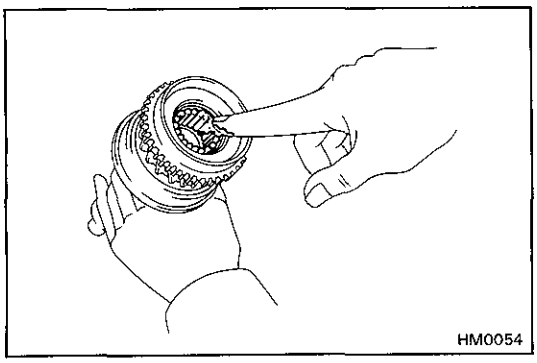

5. **INSTALL INPUT SHAFT**
   (a) Using a snap ring pliers, install the snap ring onto the bearing.
   (b) Install the 17 needle roller bearings into the input shaft.
   (c) Apply MP grease to the needle roller bearings.
   (d) Align the synchronizer ring slots with the shifting keys.

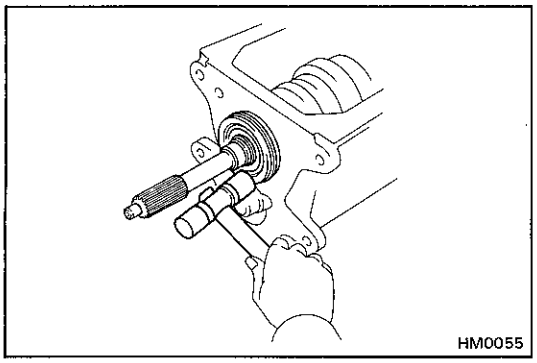
HM0055

(e) Using a plastic hammer, drive in the input shaft.

HINT: Be sure that the counter gear is low enough so as not to interfere with the input shaft.

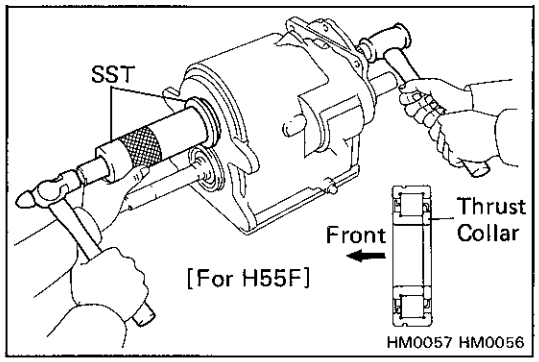

HM0057 HM0056

6. INSTALL COUNTER GEAR FRONT BEARING

(a) Turn the transmission over and align the counter gear center.

(b) (H55F)
Install the thrust collar for the front bearing onto the counter gear.

(c) Using SST, drive in the bearing.

SST 09316-60010 (09316-00010, 09316-00030)

HINT: When driving in the bearing, support the counter gear in rear with a 3-5 lb hammer or equivalent.

(d) Install the snap ring onto the bearing outer race.

(e) Select a snap ring that will allow minimum axial play and install it on the counter gear front end.

Snap ring thickness

Mark	Thickness mm (in.)
0	2.05 — 2.10 (0.0807 — 0.0827)
2	2.15 — 2.20 (0.0846 — 0.0866)
4	2.25 — 2.30 (0.0886 — 0.0906)

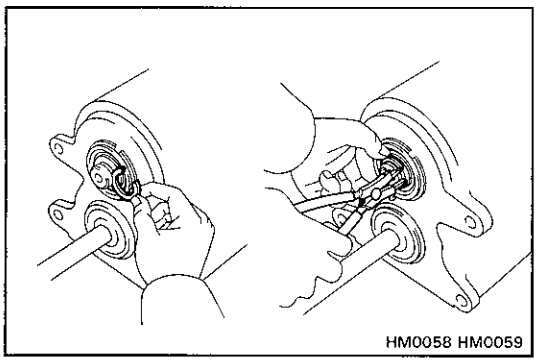
HM0058 HM0059

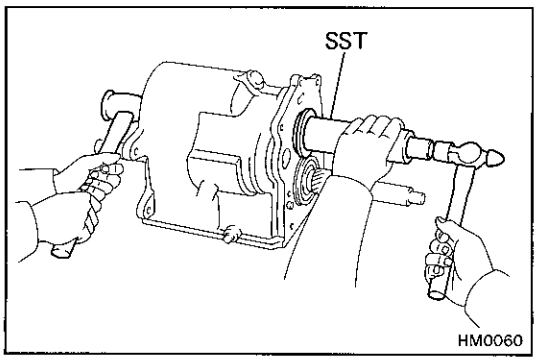

HM0060

7. INSTALL COUNTER GEAR REAR BEARING

(a) (H55F)
Install the snap ring to the counter gear rear bearing outer race.

(b) Using SST, drive in the rear bearing.

SST 09316-60010 (09316-00010, 09316-00030)

HINT: When driving in the bearing, support the counter gear in front with a 3-5 lb hammer or equivalent.

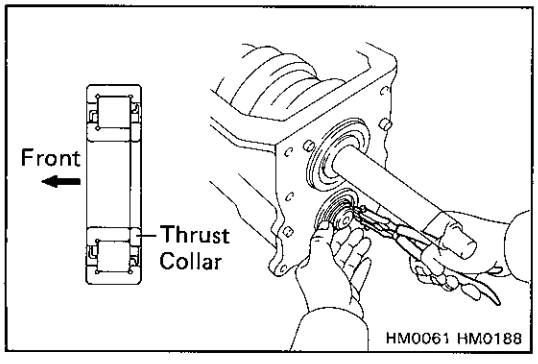

HM0061 HM0188

(c) (H41)
Install the thrust collar for the rear bearing onto the counter gear rear end.

(d) (H41)
Using snap ring pliers, install the snap ring onto the counter gear rear end.

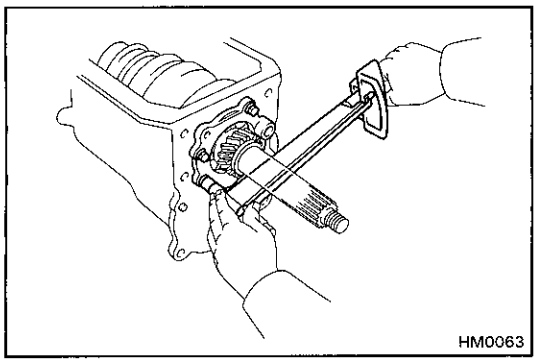
HM0063

8. (H55F)
INSTALL REAR BEARING RETAINER

(a) Install the rear bearing retainer to the transmission case.

(b) Install the four bolts and torque them.

Torque: 185 kg-cm (13 ft-lb, 18 N·m)

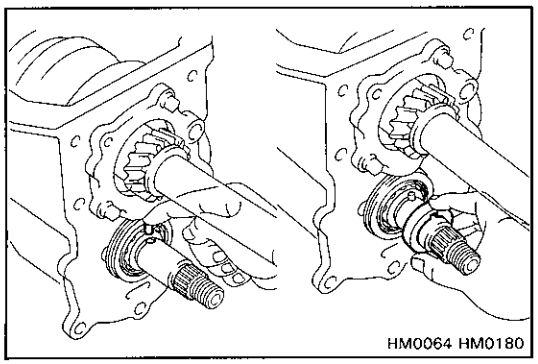
HM0064 HM0180

9. (H55F)
INSTALL STRAIGHT PIN AND COUNTER FIFTH GEAR THRUST WASHER

(a) Install the straight pin onto the counter shaft.

(b) Align the thrust washer slot with the straight pin, and install the thrust washer.

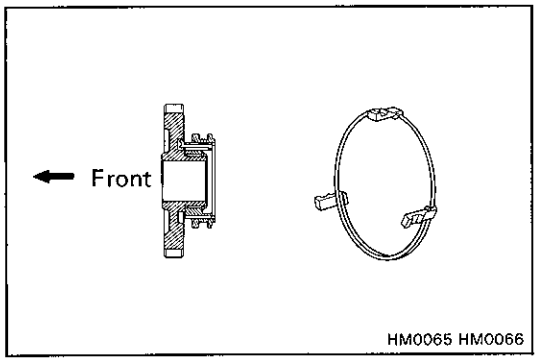

HM0065 HM0066

10. (H55F)
ASSEMBLE COUNTER FIFTH GEAR

(a) Install the No.3 hub sleeve and shifting keys to the counter fifth gear.

(b) Install the shifting key springs under the shifting keys so that the spring ends are not in line, as shown.

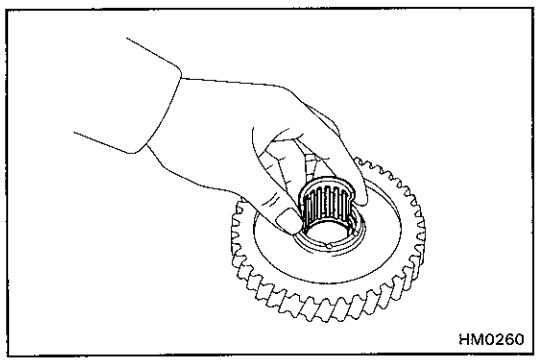
HM0260

11. (H55F)
INSTALL NEEDLE ROLLER BEARING

(a) Apply MP grease to the needle roller bearing.

(b) Install the needle roller bearing into the counter fifth gear.

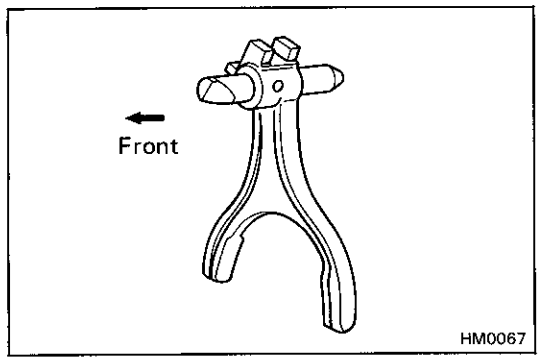

HM0067

12. (H55F)
ASSEMBLE FIFTH SHIFT FORK

(a) Install the fifth shift fork to the shaft.

(b) Align the pin holes of the fifth shift fork and shaft.

(c) Using a pin punch and hammer, drive in the slotted spring pin.

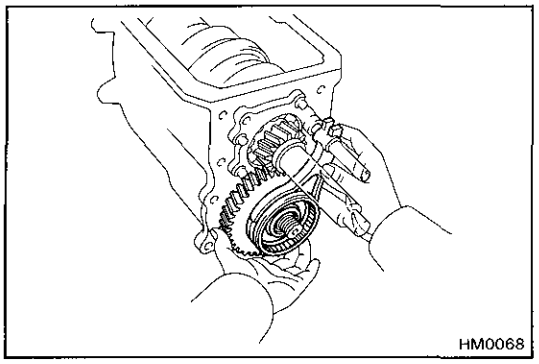

13. **(H55F)**
INSTALL COUNTER FIFTH GEAR ASSEMBLY WITH FIFTH SHIFT FORK

(a) Install the fifth shift fork and fork shaft onto hub sleeve No.3.

(b) Install the counter fifth gear assembly with the fifth shift fork.

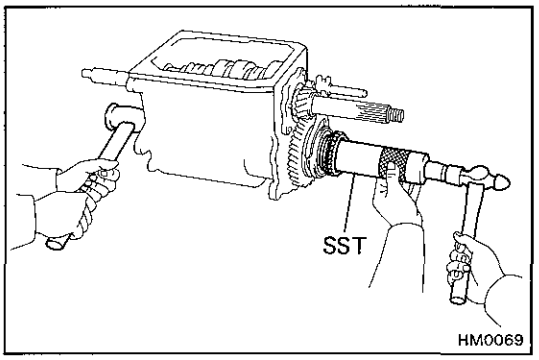

14. **(H55F)**
INSTALL SYNCHRONIZER RING AND GEAR SPLINE PIECE NO.5

(a) Align the synchronizer ring slots with the shifting keys, and place the synchronizer ring on the rear end of the counter fifth gear.

(b) Using SST, drive gear spline piece No.5 into the counter gear to where the lock nut can be installed.

SST 09316-60010 (09316-00010)

HINT: When driving in gear spline piece No.5, support the counter gear in front with a 3 — 5 lb hammer or equivalent.

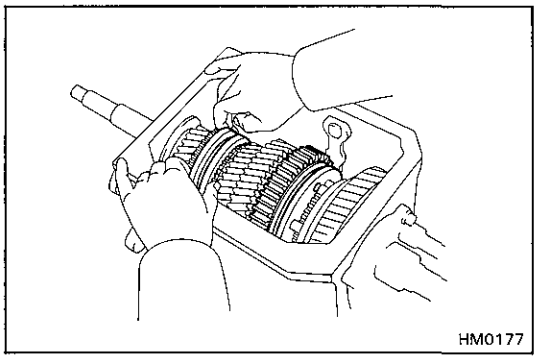

15. **(H55F)**
INSTALL LOCK NUT TO COUNTER GEAR REAR END

(a) Engage the gear double meshing.

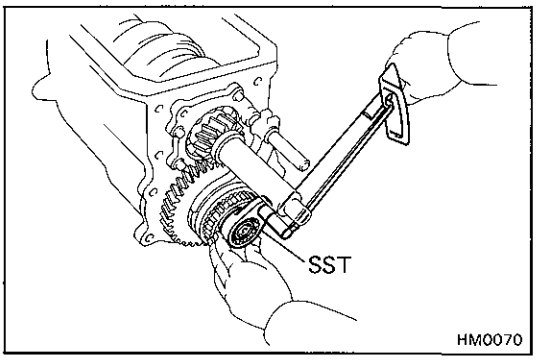

(b) Using SST, install and torque a new lock nut.

SST 09326-20011

Torque: 1,160 kg-cm (84 ft-lb, 114 N·m)

HINT: Use a torque wrench with a fulcrum lench of 425 mm (16.73 in.).

(c) Disengage the gear double meshing.

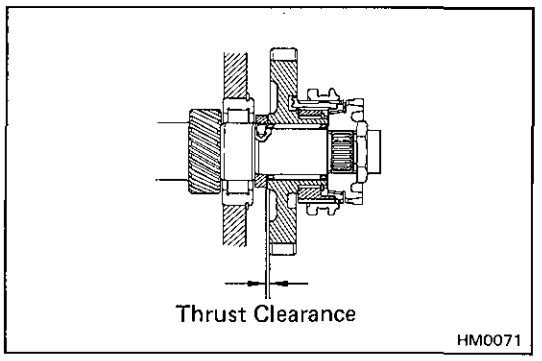

(d) Using a feeler gauge, measure the counter fifth gear thrust clearance.

Standard clearance: **0.10 — 0.30 mm (0.0039 — 0.0118 in.)**

Maximum clearance: **0.30 mm (0.0118 in.)**

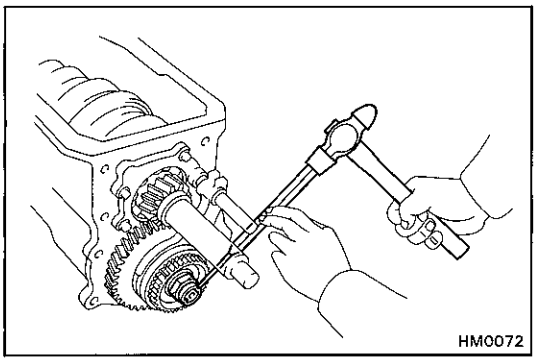

(e) Using a punch, stake the lock nut.

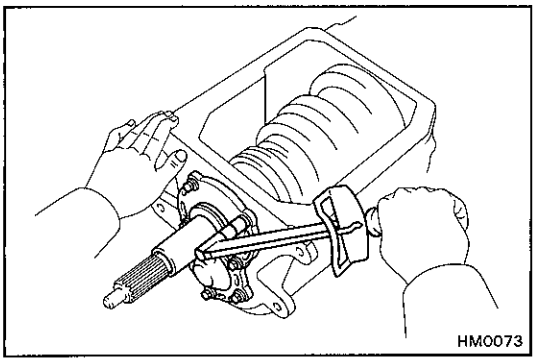

16. INSTALL FRONT BEARING RETAINER WITH A GASKET

(a) Install the front bearing retainer with a new gasket.

(b) Apply liquid sealer to the bolts.

Sealant: Part No.08833-00080, THREE BOND 1344, LOCTITE 242 or equivalent

(c) Install and torque the bolts.

Torque: 170 kg-cm (12 ft-lb, 17 N·m)

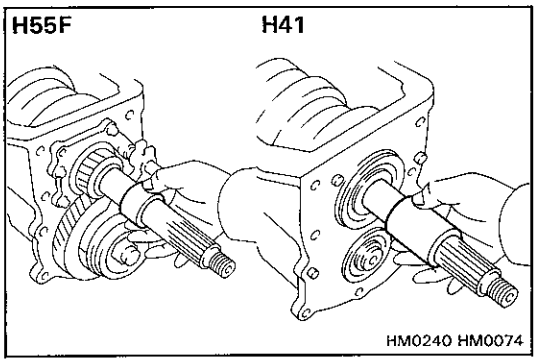

17. INSTALL SPACER

Install the spacer on the output shaft.

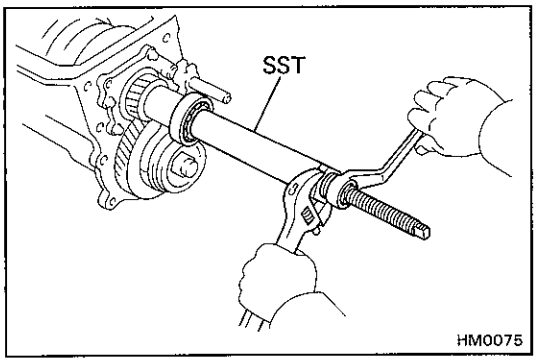

18. INSTALL OUTPUT SHAFT REAR BEARING

Using SST, install the rear bearing.

SST 09309-36033

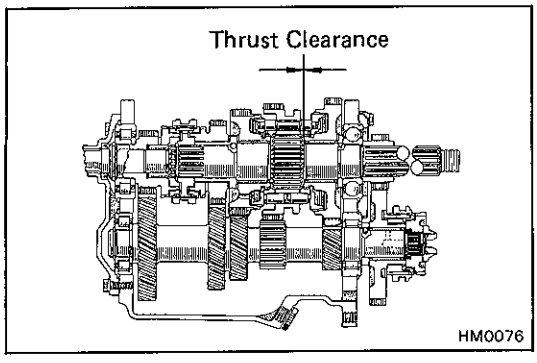

19. MEASURE FIRST GEAR THRUST CLEARANCE

Using a feeler gauge, measure the thrust clearance.

Standard clearance: 0.175 — 0.320 mm (0.0069 — 0.0126 in.)

Maximum clearance: 0.35 mm (0.0138 in.)

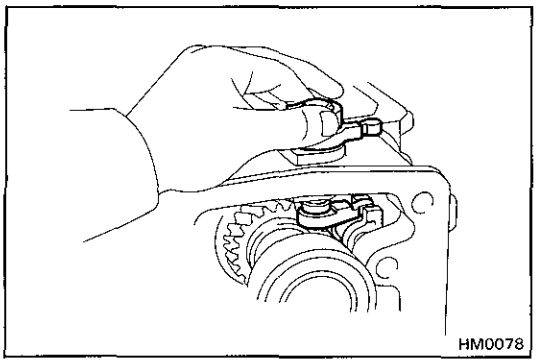

20. INSTALL TRANSFER ADAPTOR WITH A GASKET

(a) Place a new gasket in position.

(b) (H55F)
Align the end of the fifth shift arm and fifth shift fork, and install the transfer adaptor.

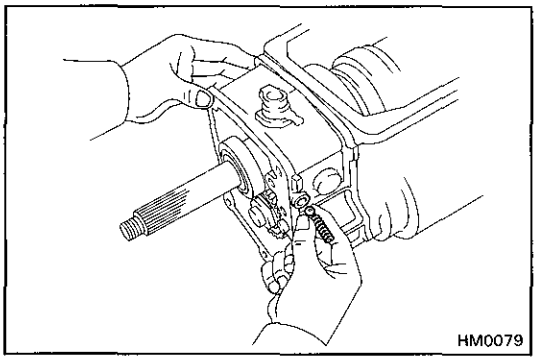

(c) (H55F)
Install the locking ball and spring.

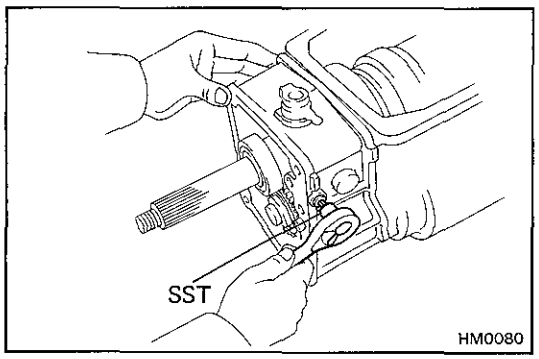

(d) (H55F)
Apply liquid sealer to the plug.

Sealant: Part No.08833-00080, THREE BOND 1344, LOCTITE 242 or equivalent

(e) (H55F)
Using SST, install and torque the screw plug.

SST 09313-30021

Torque: 250 kg-cm (18 ft-lb, 25 N·m)

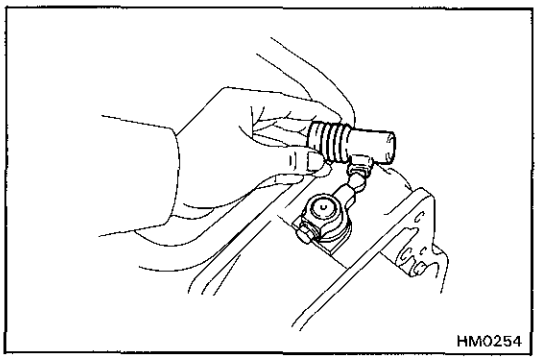

21. INSTALL CASE COVER

(a) (H55F)
Install the dust boot.

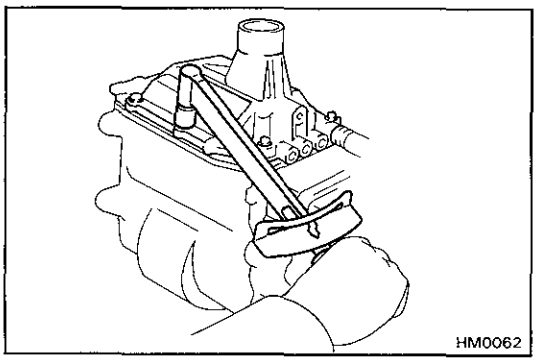

(b) Install the case cover with a new gasket.

(c) Torque the bolts.

Torque: 400 kg-cm (29 ft-lb, 39 N·m)

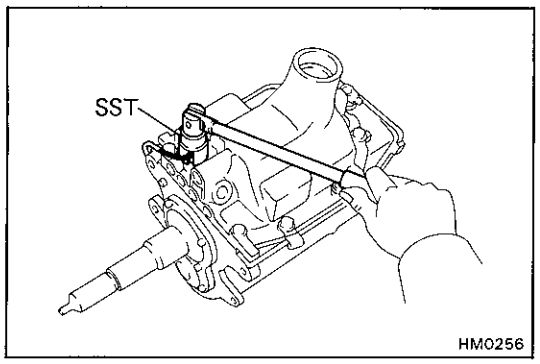

22. INSTALL BACK-UP LIGHT SWITCH

Using SST, install the back-up light switch.

SST 09817-16011

Torque: 410 kg-cm (30 ft-lb, 40 N·m)

23. INSTALL TRANSFER
(See page TF-4)

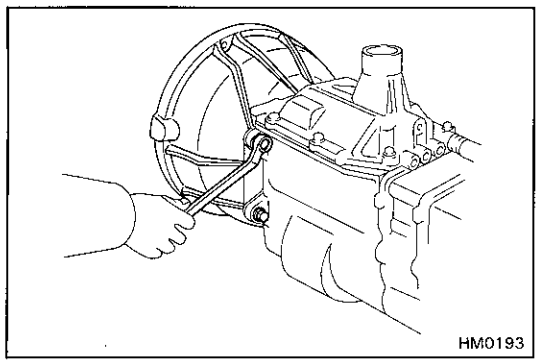

24. (HJ, BJ)
INSTALL CLUTCH HOUSING

Install and torque the four bolts.

Torque: 650 kg-cm (47 ft-lb, 64 N·m)

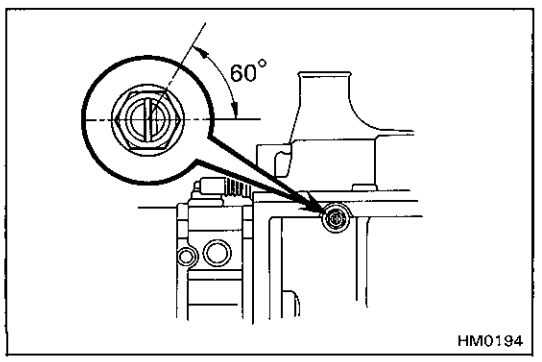

25. ADJUST REVERSE SHIFT ARM PIVOT POSITION

(a) Position the adjustment mark on the shift arm pivot end toward the front.

(b) Temporarily install the shift lever, and if the shift lever is catching on something in the selecting direction, adjust by moving the position of the alignment mark by 60°.

(c) Torque the nut.

Torque: 250 kg-cm (18 ft-lb, 25 N·m)