STEERING KNUCKLE AND AXLE SHAFT

COMPONENTS

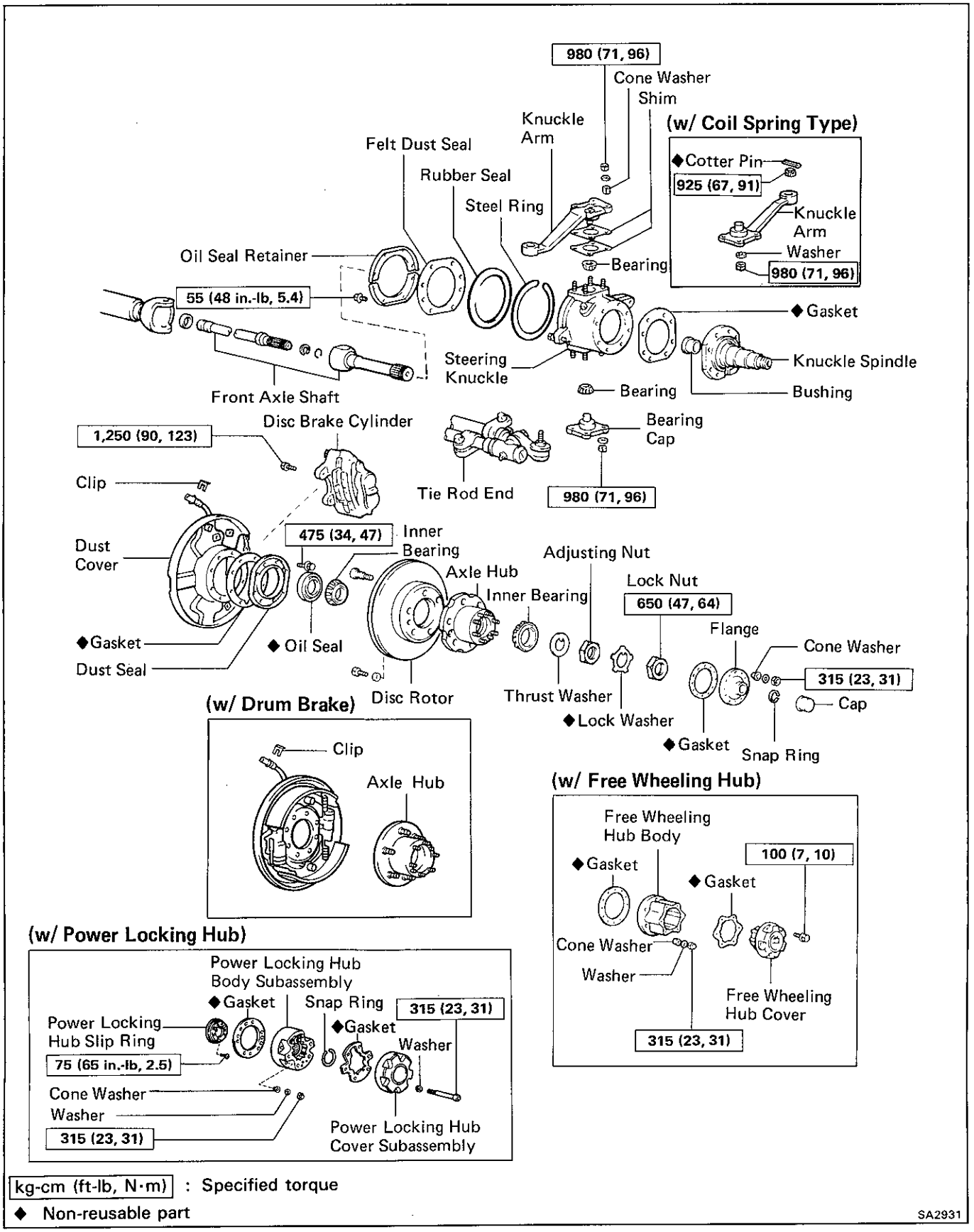

kg-cm (ft-lb, N·m) : Specified torque

◆ Non-reusable part

SA2931

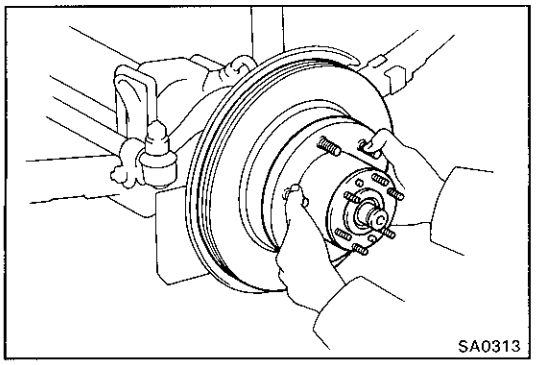

DISASSEMBLY OF STEERING KNUCKLE AND AXLE SHAFT

(See page SA-38)

1. **REMOVE FRONT AXLE HUB**
(See page SA-29)

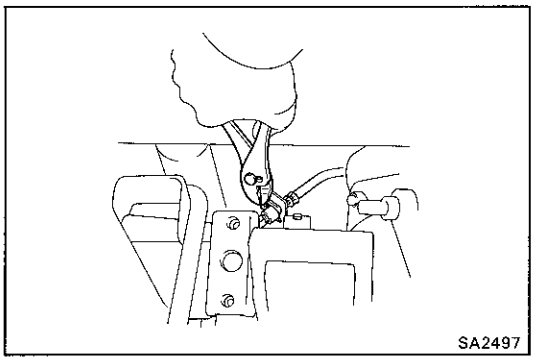

2. **DISCONNECT BRAKE HOSE**
   (a) Using pliers, remove the clip.

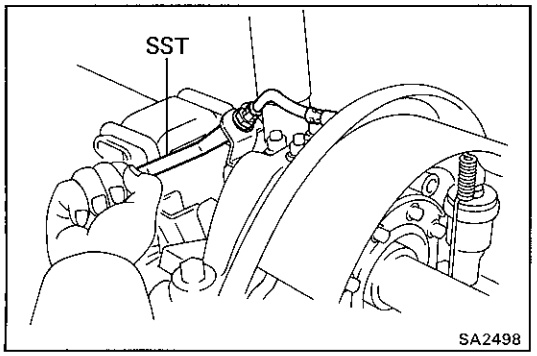

   (b) Using SST, disconnect the brake tube.
   SST 09751-36011

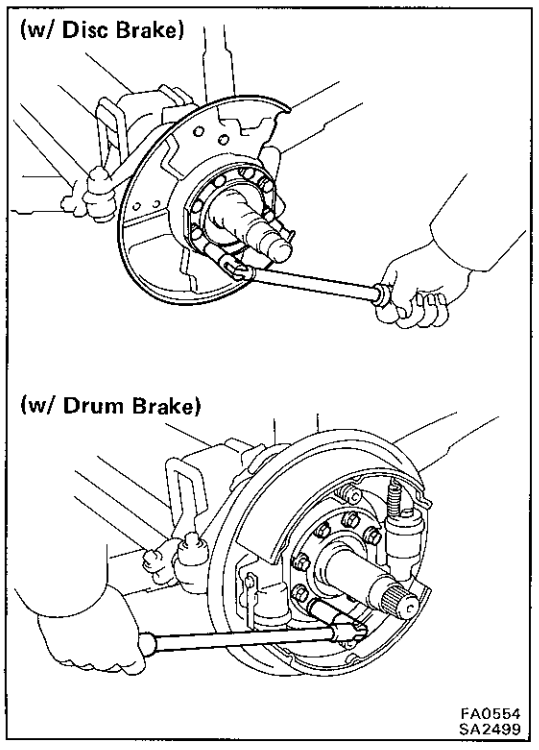

3. **REMOVE KNUCKLE SPINDLE MOUNTING BOLTS**

4. **REMOVE DUST SEAL AND DUST COVER**
   Remove the eight bolts, dust seal, dust cover and gasket.

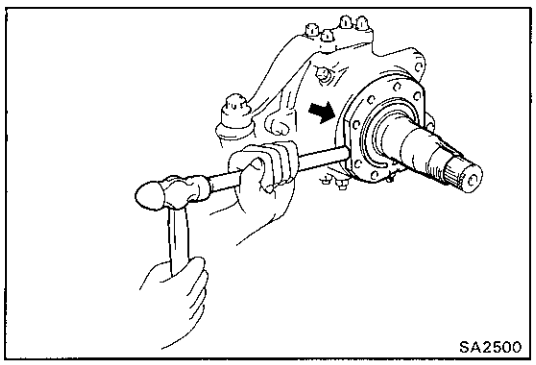

5. REMOVE KNUCKLE SPINDLE

(a) (w/ Power Locking Hub)
Disconnect the connector.

(b) Using a brass bar and hammer, drive out the knuckle spindle from the steering knuckle.

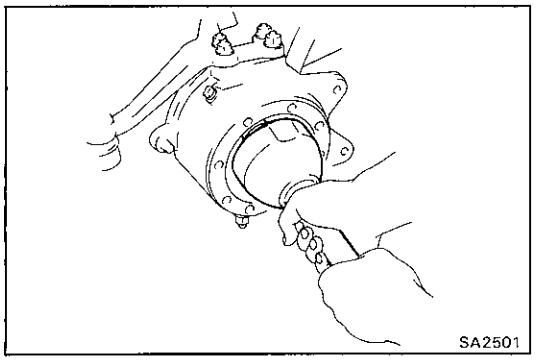

6. REMOVE AXLE SHAFT

Position one flat part of the outer shaft upward and pull out the axle shaft.

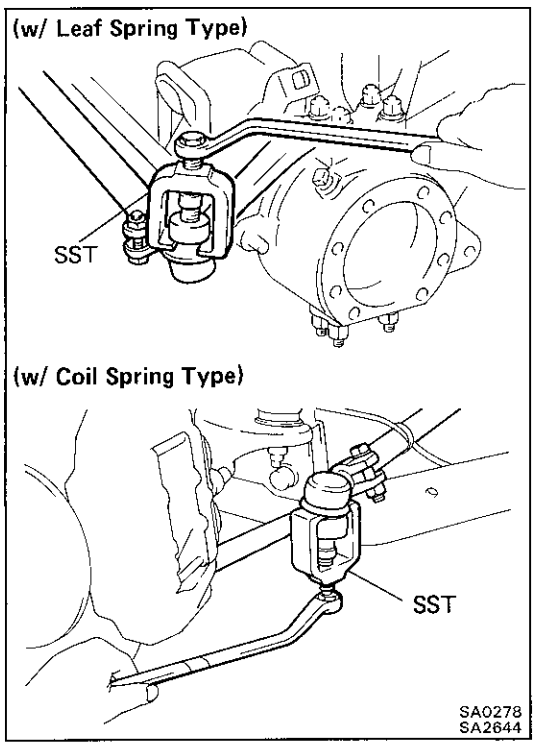

7. DISCONNECT TIE ROD END FROM KNUCKLE ARM

(a) Remove the cotter pin and castle nut.

(b) Using SST, disconnect the tie rod end from the knuckle arm.

SST 09611-22012

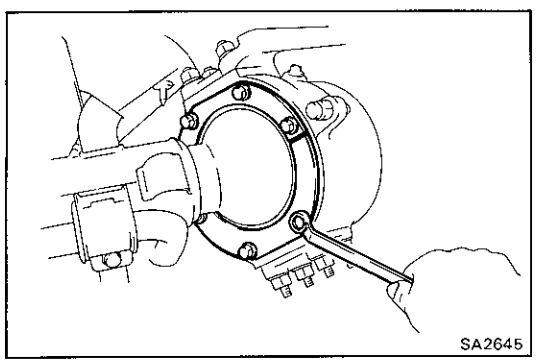

8. REMOVE OIL SEAL RETAINER, STEEL RING, RUBBER SEAL AND FELT DUST SEAL

Remove the six bolts and the oil seal retainer, steel ring, rubber seal and felt dust seal.

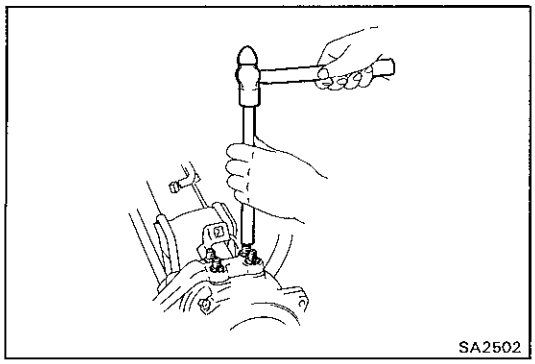
SA2502

9. REMOVE KNUCKLE ARM AND BEARING CAP

(a) Remove the knuckle arm and bearing cap mounting nuts.

(b) Using a brass bar, tap the slits of the cone washers and remove them from the knuckle arm.

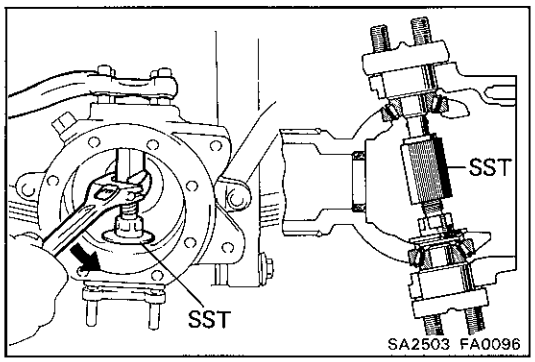

SA2503 FA0096

(c) Using SST, push out the knuckle arm and shims from the steering knuckle.

SST 09606-60020

HINT: Use the SST without a collar.

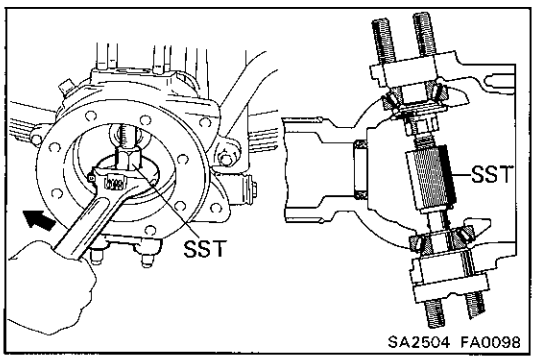

SA2504 FA0098

(d) Using SST, push out the bearing cap from the steering knuckle.

SST 09606-60020

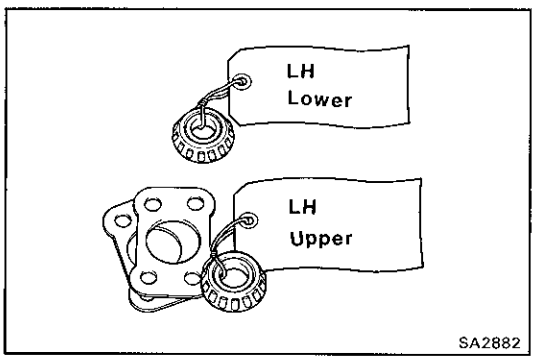

SA2882

10. REMOVE STEERING KNUCKLE AND BEARING

HINT: Mark the removed adjusting shims and bearings so as to enable reassembling them to their proper positions.

INSPECTION AND REPAIR OF STEERING KNUCKLE AND AXLE SHAFT

1. INSPECT KNUCKLE SPINDLE

Clean the knuckle spindle and inspect the bushing for wear or damage.

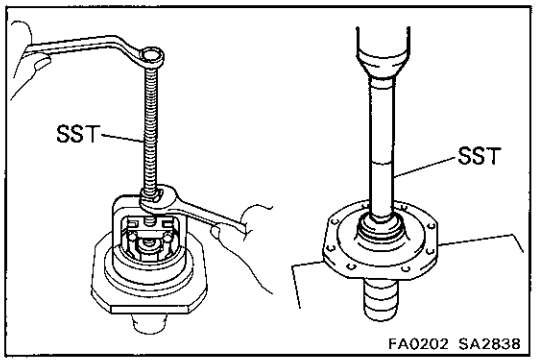

2. REPLACE BUSHING

(a) Using SST, remove the bushing.

SST 09612-65014 (09612-01020, 09612-01050)

(b) Using SST, press a new bushing into the spindle.

SST 09618-60010

3. INSPECT BEARINGS AND OUTER RACES

Clean the bearings and outer races and inspect them for wear or damage.

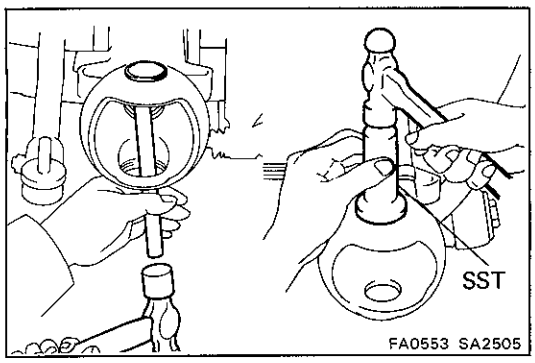

4. IF NECESSARY, REPLACE BEARING OUTER RACE

(a) Using a brass bar, drive out the bearing outer race.

(b) Using SST, carefully drive in a new bearing outer race.

SST 09605-60010

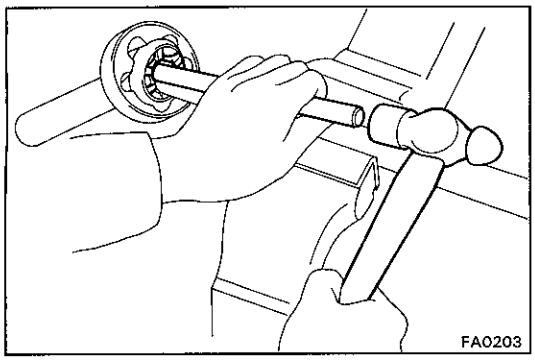

5. INSPECT BIRFIELD JOINT INNER PARTS

(a) Hold the inner shaft in a vise.

(b) Place a brass bar against the joint inner race and drive out the outer shaft.

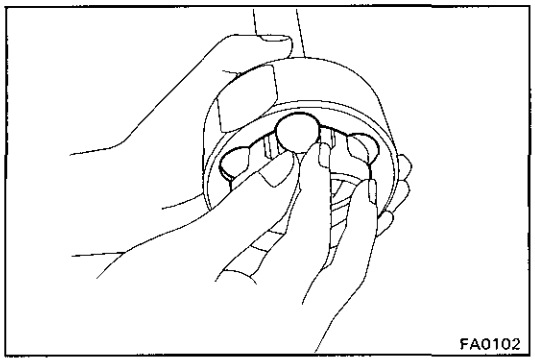

(c) Tilt the inner race and cage, then take out the bearing balls one by one.

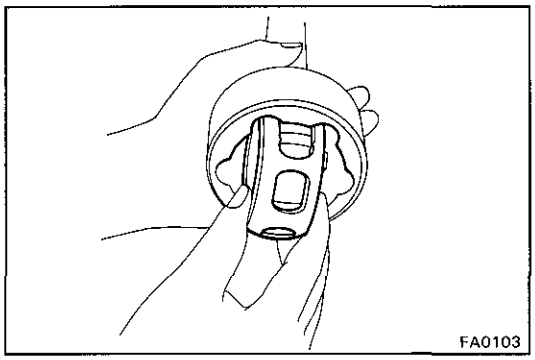

(d) Fit the two large openings in the cage against the protruding parts of the outer shaft, and pull out the cage and inner race.

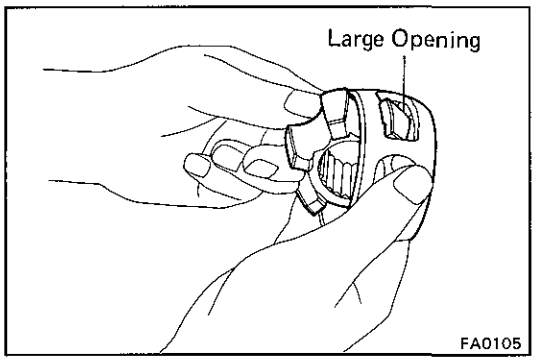

(e) Take out the inner race from the cage through the large opening.

(f) Clean and inspect the joint inner parts for wear or damage.

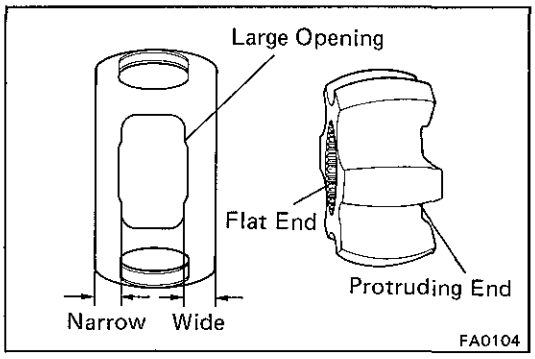

(g) Coat the joint inner parts and outer shaft inside with molybdenum disulphide lithium base grease.

(h) Insert the inner race in the cage through the large opening.

(i) Position the protruding end of the inner race toward the wide side of the cage.

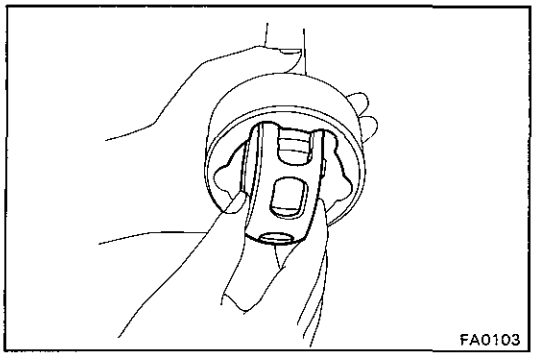

(j) Assemble the cage and inner race to the outer shaft by fitting the two large openings in the cage against the protruding parts of the outer shaft.

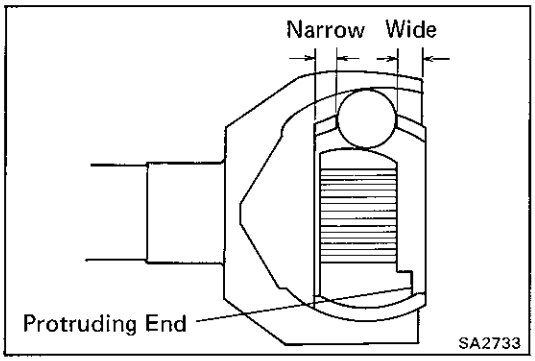

(k) Make sure to position the wide side of the cage and the inner race protruding end outward.

(l) Fit in the inner race and cage, and install the six bearing balls in the outer shaft. (See step (c))

(m) Pack molybdenum disulphide lithium base grease in the outer shaft.

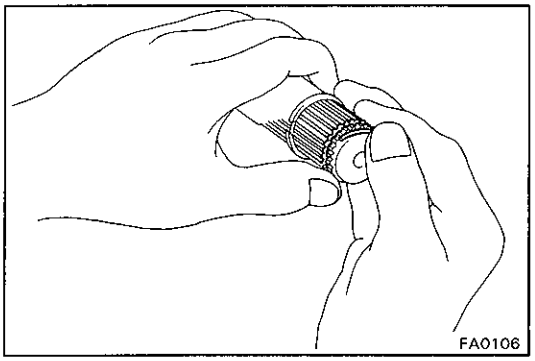

(n) Install a new snap rings to the inner shaft.

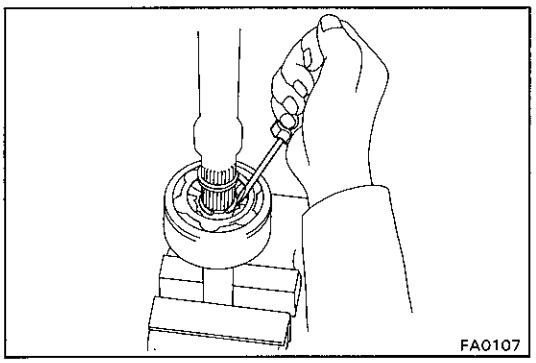

(o) Hold the outer shaft in a vise and, while compressing the inner snap ring, install the inner shaft to the outer shaft.

(p) Check that the inner shaft cannot be pulled out.

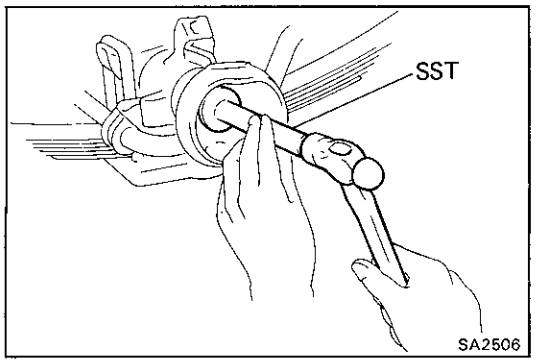

ASSEMBLY OF STEERING KNUCKLE AND AXLE SHAFT

(See page SA-38)

1. INSTALL OIL SEAL TO AXLE HOUSING

Using SST, drive in a new oil seal into the axle housing.

SST 09618-60010

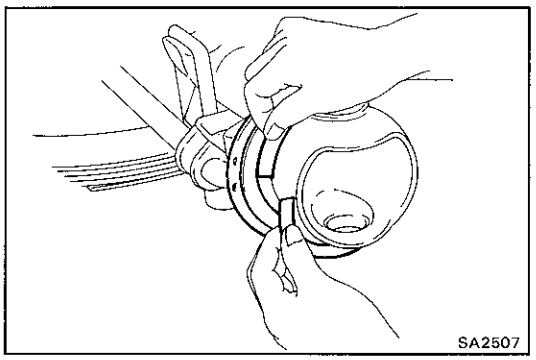

2. INSTALL FELT DUST SEAL, RUBBER SEAL, STEEL RING AND OIL SEAL RETAINER

Install the felt dust seal, rubber seal, steel ring and oil seal retainer to the axle housing.

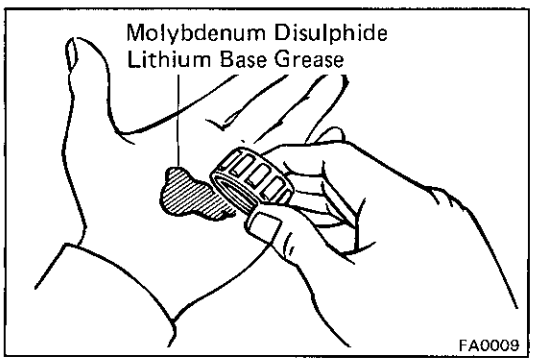

3. PACK BEARINGS WITH MOLYBDENUM DISULPHIDE LITHIUM BASE GREASE

(a) Place molybdenum disulphide lithium base grease in the palm of your hand.

(b) Pack grease into the bearing, continuing until the grease oozes out from the other side.

(c) Do the same around the bearing circumference.

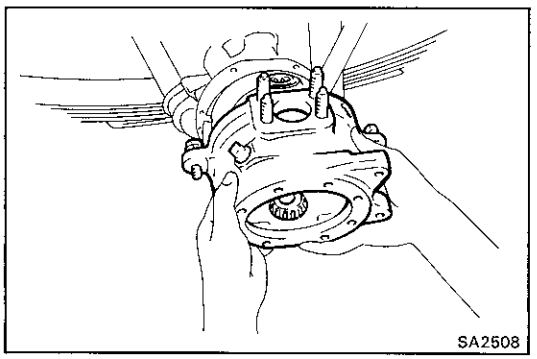

4. INSTALL STEERING KNUCKLE AND BEARINGS

(a) Place the bearings in positions to the knuckle and axle housing.

(b) Insert the knuckle to the axle housing.

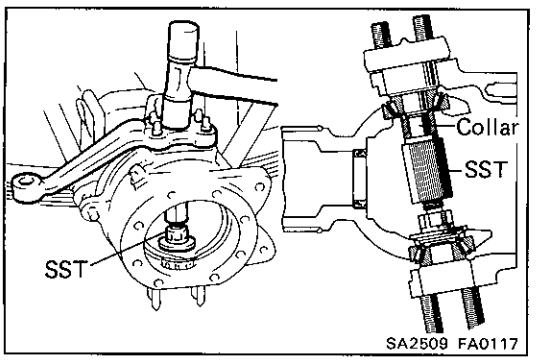

5. INSTALL KNUCKLE AND BEARING CAP

(a) Using SST, support the upper bearing inner race.

SST 09606-60020

HINT: Use SST with collar.

(b) Install the bearing cap or the knuckle arm over the shims that were originally used.

(c) Using a hammer, drive the bearing cap or the third arm into the bearing inner race.

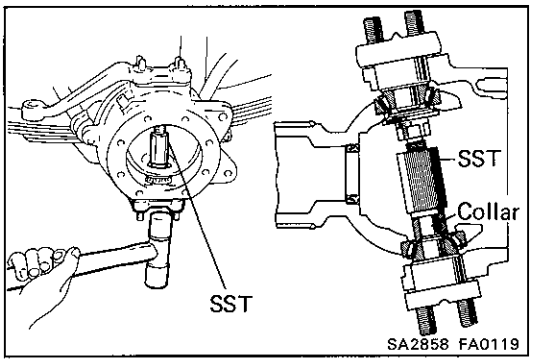

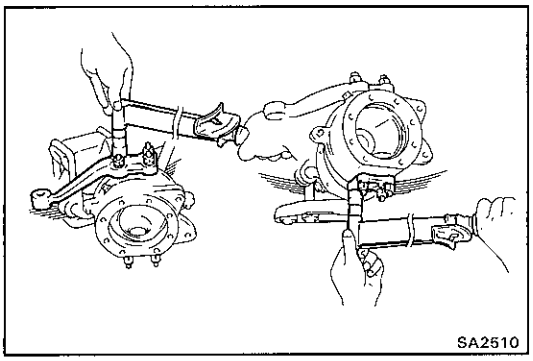

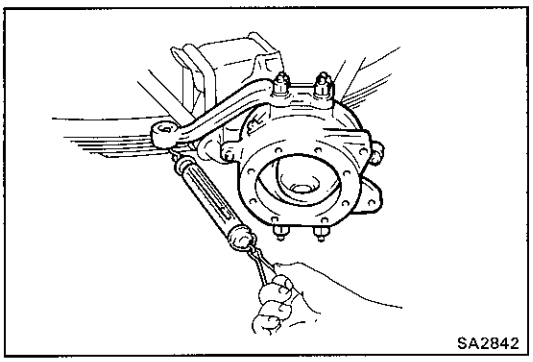

Adjusting shim thickness

Thickness mm (in.)
0.1 (0.004)
0.2 (0.008)
0.3 (0.012)
0.5 (0.020)
1.0 (0.039)

(d) Using SST, support the lower bearing inner race.

SST 09606-60020

HINT: Use SST with collar.

(e) Install the bearing cap or the knuckle arm.

(f) Using a hammer, drive the knuckle arm into the bearing inner race.

(g) Remove SST from the knuckle.

SST 09606-60020

(h) Install and torque the nuts.

(Knuckle Arm)
Install the cone washers, spring washers, nut and the four nuts and torque the nuts.

Torque: 980 kg-cm (71 ft-lb, 96 N·m)

(Third Arm)
Install the cone washers, spring washers, nut and four nuts and torque the nuts.

Torque: 980 kg-cm (71 ft-lb, 96 N·m)

(Bearing Cap)
Install the spring washers and four nuts and torque the nuts.

Torque: 980 kg-cm (71 ft-lb, 96 N·m)

6. CHECK BEARINGS PRELOAD

Using a spring tension gauge, measure the preload.

Preload (starting):
RJ, LJ
2.5 — 4.5 kg (5.5 — 9.9 lb, 25 — 44 N)
FJ, PZJ, HZJ
3.0 — 6.5 kg (6.6 — 14.3 lb, 29 — 64 N)

If the bearing preload is not within specification, adjust it by replacing the adjusting shims.

HINT:

- If the bearing preload is excessive, use thicker shims.
- If the bearing preload is insufficient, use thinner shims.
- The preload will change about 0.1 — 0.2 kg (0.2 — 0.4 lb, 1.0 — 2.0 N) with each 0.1 mm (0.004 in.) alteration of the adjusting shim thickness.

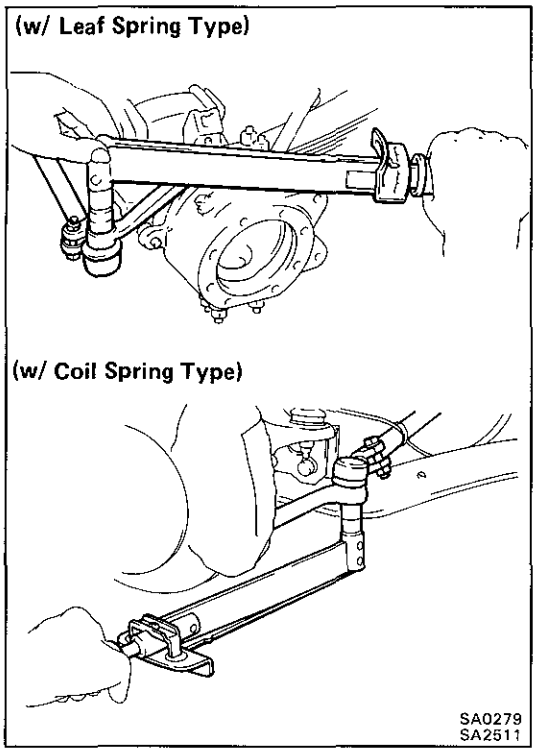

7. CONNECT TIE ROD TO KNUCKLE ARM

Torque the castle nut and secure it with a new cotter pin.

Torque: 925 kg-cm (67 ft-lb, 91 N·m)

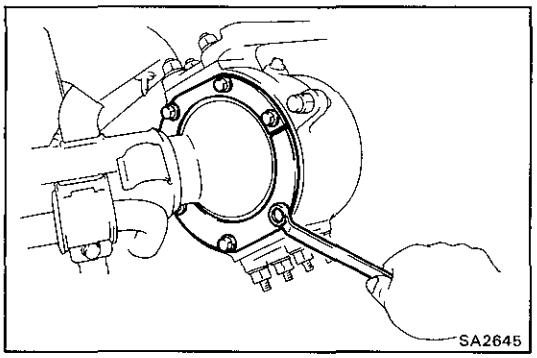

8. INSTALL FELT DUST SEAL, RUBBER SEAL, STEEL RING AND OIL SEAL RETAINER

Install the felt dust seal, rubber seal, steel ring and oil seal retainer to steering knuckle with the six bolts.

Torque: 55 kg-cm (48 in.-lb, 5.4 N·m)

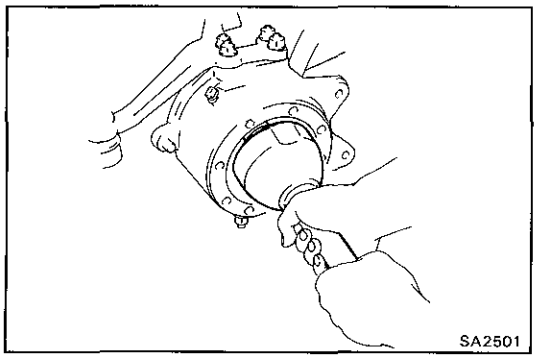

9. INSTALL AXLE SHAFT

Position one flat part of the outer shaft upward, and install the shaft.

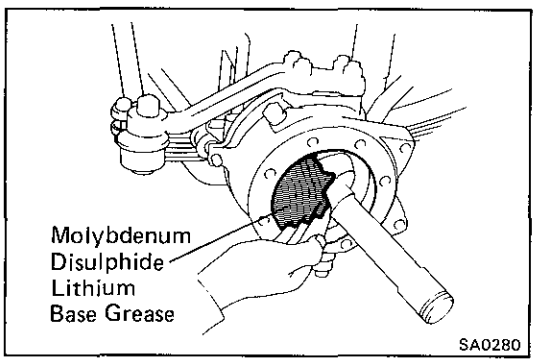

10. PACK MOLYBDENUM DISULPHIDE LITHIUM BASE GREASE

Pack molybdenum disulphide lithium base grease into the knuckle to about three fourths of the knuckle.

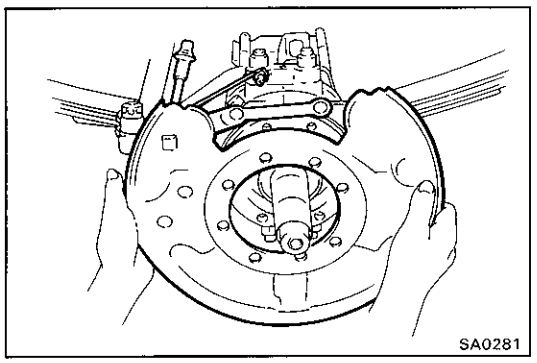
SA0281

11. **INSTALL KNUCKLE SPINDLE, DUST COVER WITH NEW GASKETS AND DUST SEAL**

(a) Place a new gasket in position on the knuckle and install the spindle.

NOTICE: (w/ Power Locking Hub)

- **Be careful not to get the wire harness and gum grommet between the spindle and the knuckle.**
- **Check that the vinyl tape come off the spindle.**

(b) Place the gasket, dust cover and dust seal on the spindle.

(c) Torque the spindle mounting bolts.

Torque: 475 kg-cm (34 ft-lb, 47 N·m)

(d) (w/ Power Locking Hub)
Connect the connector.

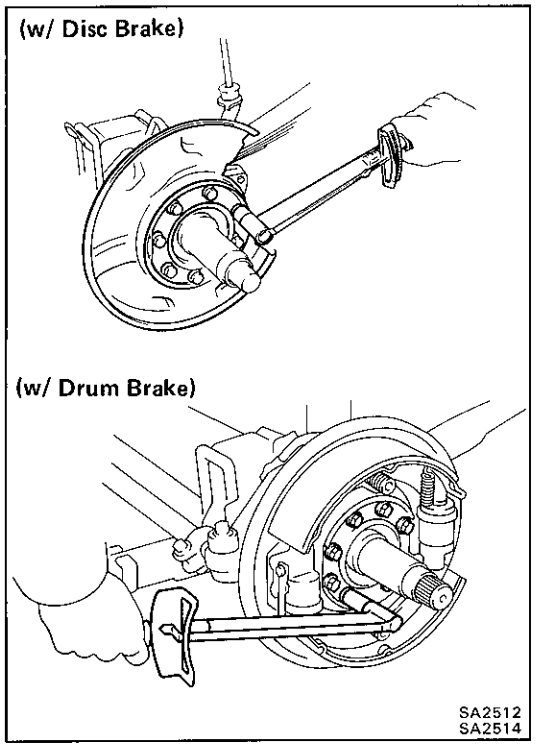

SA2512
SA2514

12. **CONNECT BRAKE HOSE**

(a) Using SST, connect the brake tube.

SST 09751-36011

Torque: 155 kg-cm (11 ft-lb, 15 N·m)

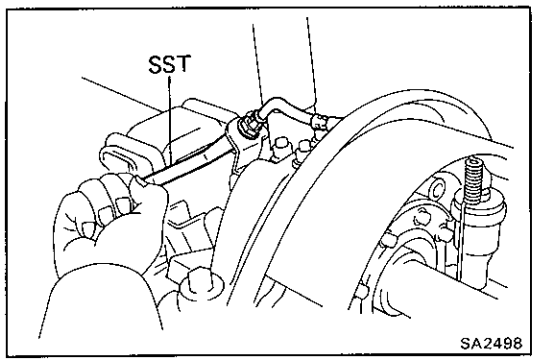

SA2498

(b) Using pliers, install the clip.

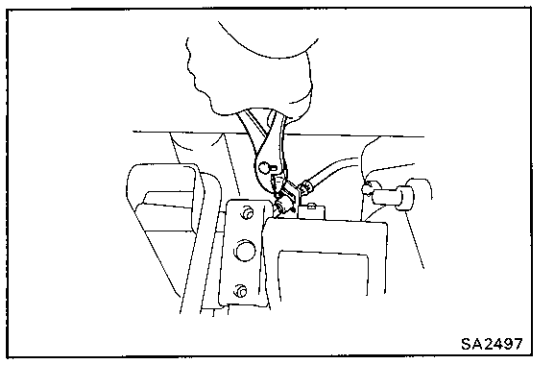
SA2497

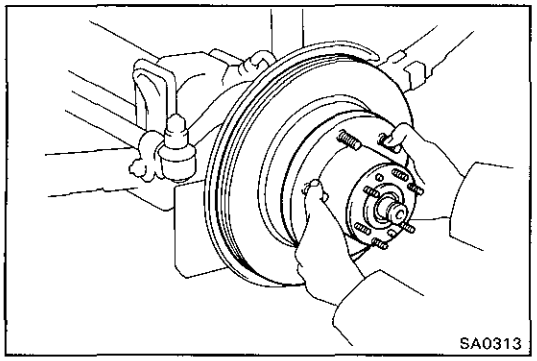

13. INSTALL AXLE HUB (See page SA-34)