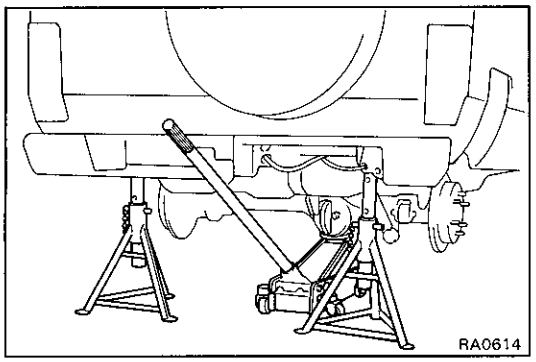

Trailing Arm

(See page SA-198)

REMOVAL OF TRAILING ARM

1. SUPPORT REAR AXLE HOUSING

Jack up and support the frame with stands. Hold the rear axle housing with a jack.

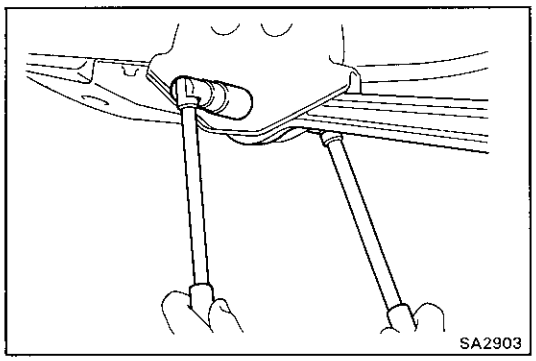

2. REMOVE TRAILING ARM

(a) Remove the front mounting nut and bolt from the frame.

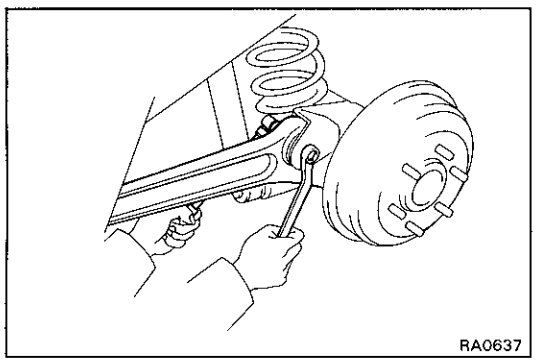

(b) Remove the two rear mounting nuts and bolts from the axle housing.

(c) Lower and remove the trailing arm.

REPLACEMENT OF TRAILING ARM

1. REPLACE THREE TRAILING ARM BUSHINGS

(a) Using SST, press out the bushing.

SST 09228-22020, 09710-30030 (09710-03180)

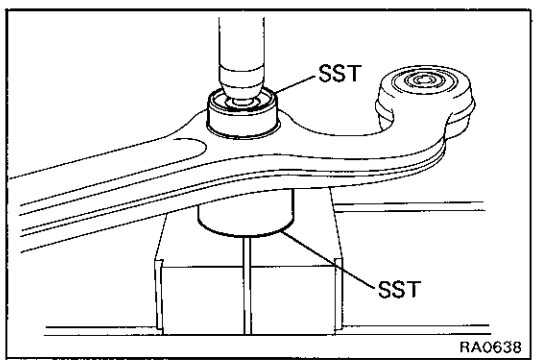

(b) Using SST, press in a new bushing.

SST 09228-22020, 09710-30030 (09710-093180)

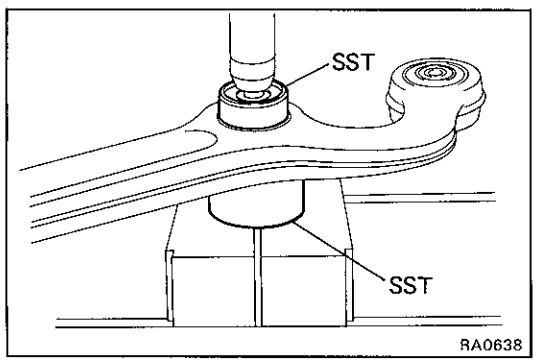

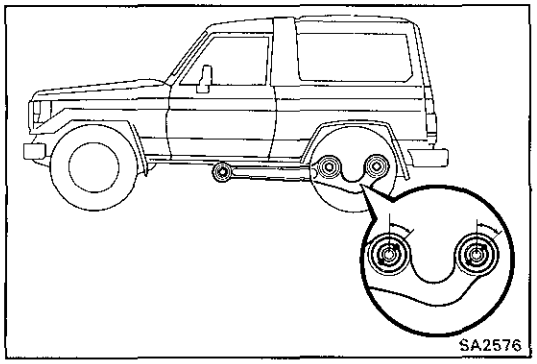

HINT: When assembly the bushing, assemble it so the holes at a 45°angle.

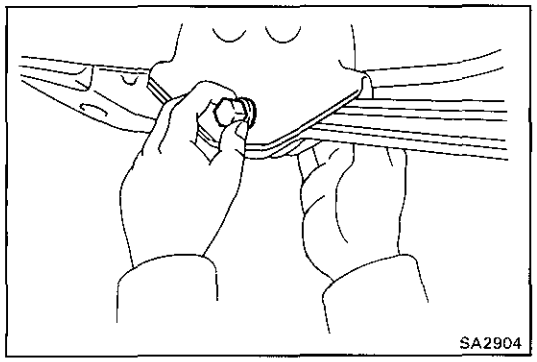

INSTALLATION OF TRAILING ARM

(See page SA-198)

1. INSTALL TRAILING ARM

(a) Temporarily install the trailing arm to the frame with the bolt, washer and nut.

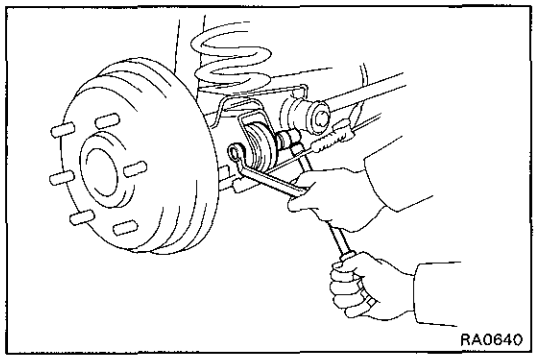

(b) Temporarily connect the trailing arm to the axle housing with the two bolts, washers and nuts.

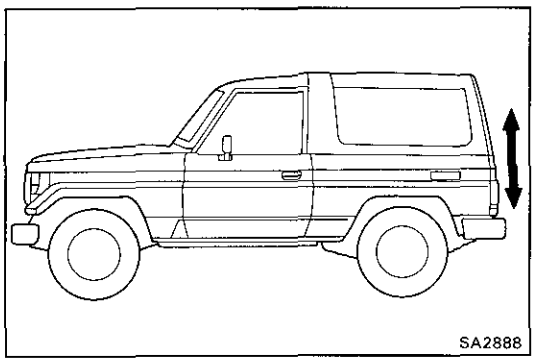

2. STABILIZE SUSPENSION

(a) Lower the vehicle.

(b) Boucne the vehicle up and down to stabilize the suspension.

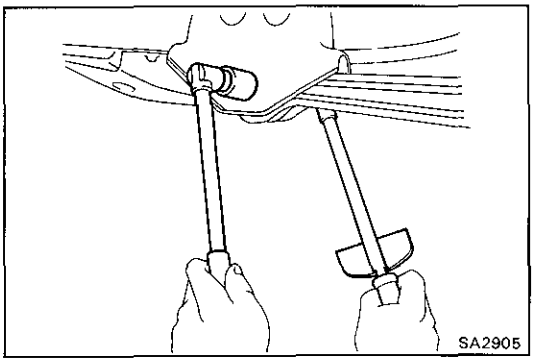

3. TORQUE BOLTS AND NUTS

(a) Torque the bolt and nut.

Torque: 1,800 kg-cm (130 ft-lb, 177 N·m)

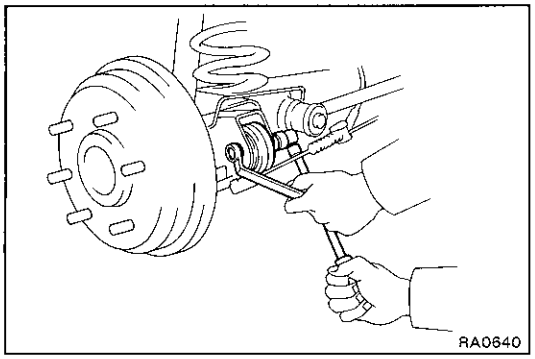

(b) Torque the two bolts and nuts.

Torque: 2,500 kg-cm (181 ft-lb, 245 N·m)