MECHANICAL WINCH

Power Take-Off (P.T.O.)

COMPONENTS

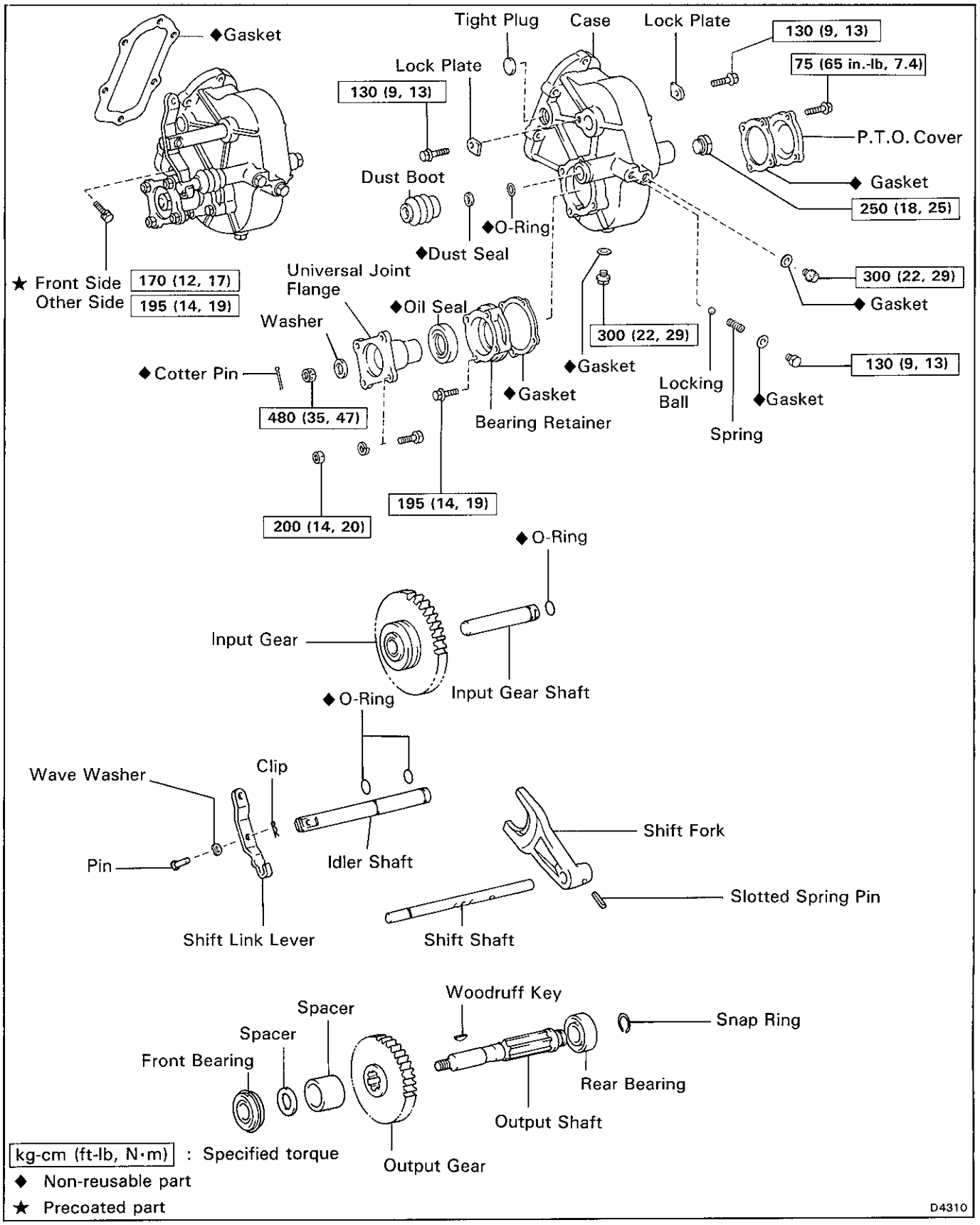

REMOVAL OF P.T.O.

(See page WI-2)

1. DRAIN P.T.O. OIL

Remove the drain plug and drain the oil.

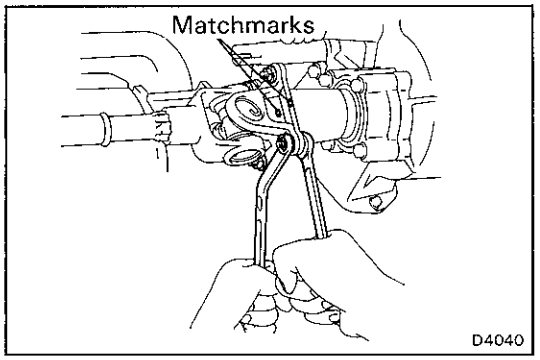

2. DISCONNECT P.T.O. DRIVE SHAFT

(a) Place matchmarks on the flange of P.T.O. and yoke of drive shaft.

(b) Remove the four bolts and nuts and disconnect the drive shaft.

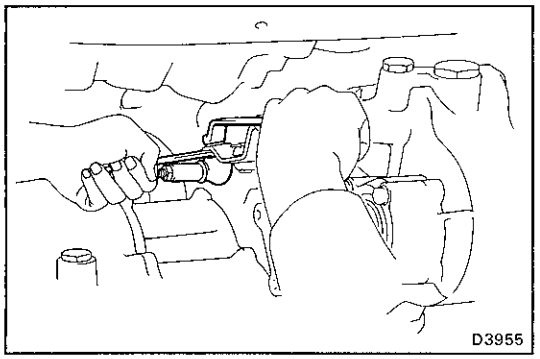

3. DISCONNECT P.T.O. SHIFT ROD

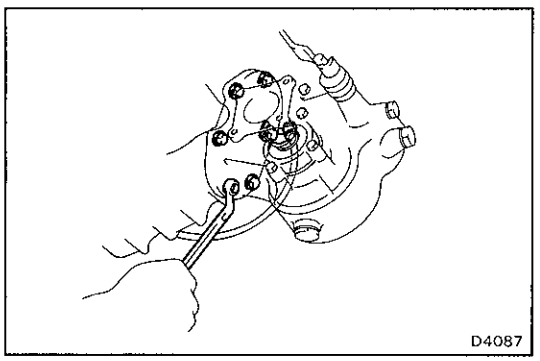

4. REMOVE P.T.O. FROM TRANSMISSION

(a) Remove the six bolts.

(b) Light tap the P.T.O. case, and then remove the P.T.O. assembly and gasket.

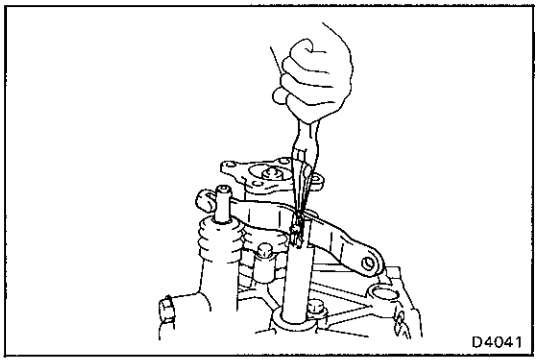

DISASSEMBLY OF P.T.O.

(See page WI-2)

1. REMOVE SHIFT LINK LEVER

Remove the clip, wave washer, pin and shift link lever.

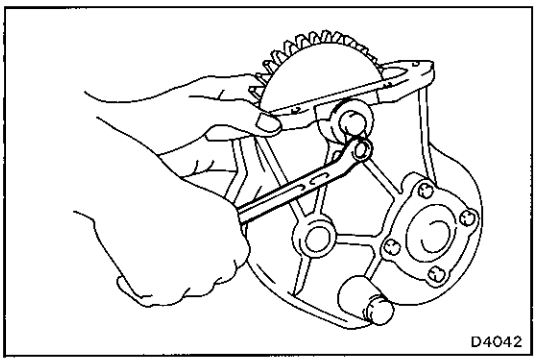

2. REMOVE INPUT GEAR AND SHAFT

(a) Remove the lock plate.

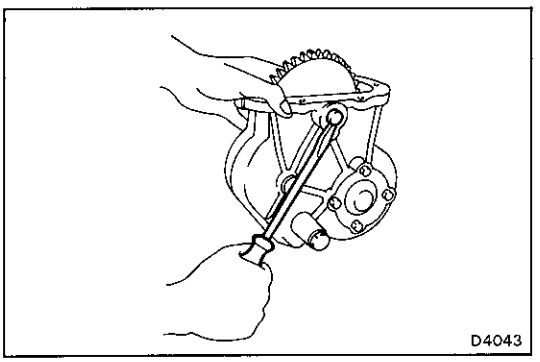

(b) Using a screwdriver, remove the input gear shaft, and remove the input gear.

(c) Remove the O-ring from the shaft.

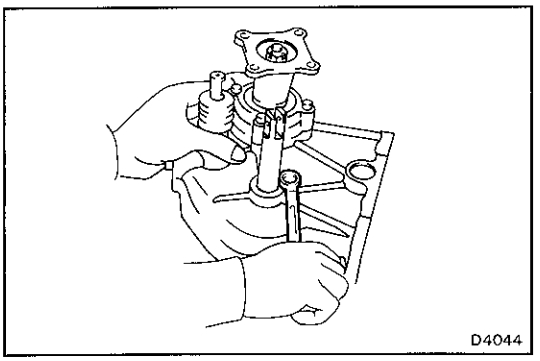

3. REMOVE IDLER SHAFT

(a) Remove the lock plate.

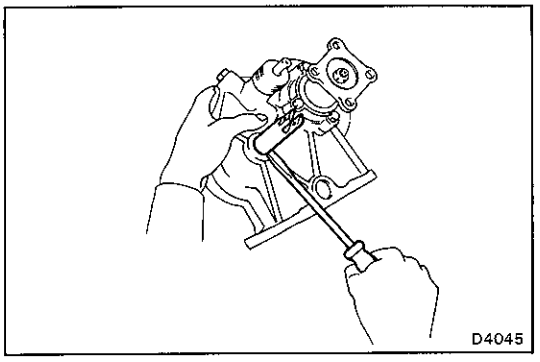

(b) Using a screwdriver, remove the idler shaft.

(c) Remove the two O-rings from the shaft.

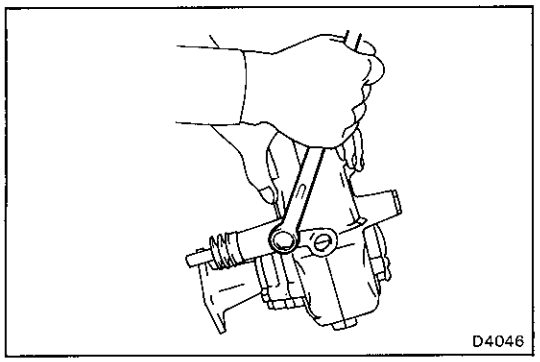

4. REMOVE SHIFT SHAFT AND FORK

(a) Remove the locking ball bolt and gasket.

(b) Remove the spring and locking ball.

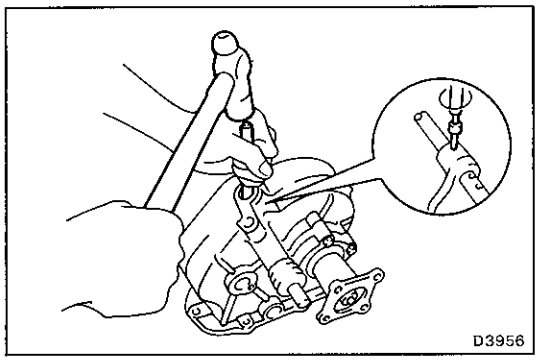

(c) Using a pin punch and hammer, tap out the slotted spring pin.

(d) Remove the dust boot, and then remove the shift shaft and fork.

(e) Remove the dust seal and O-ring.

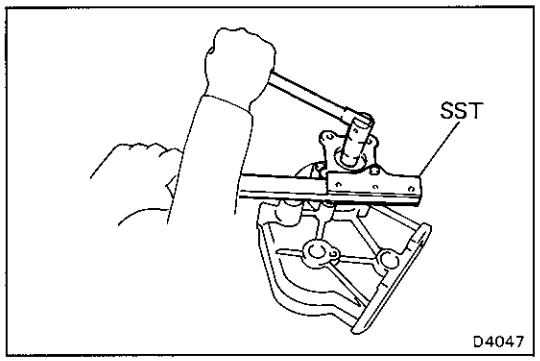

5. REMOVE UNIVERSAL JOINT FLANGE

(a) Remove the cotter pin.

(b) Using SST to hold the flange, remove the nut.

SST 09330-00021

(c) Remove the washer, flange and woodruff key.

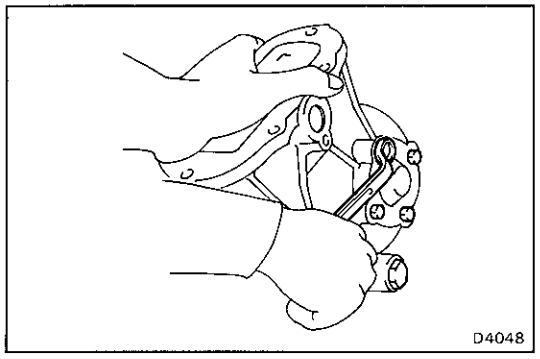

6. REMOVE P.T.O. COVER

(a) Remove the four bolts.

(b) Remove the P.T.O. cover and gasket.

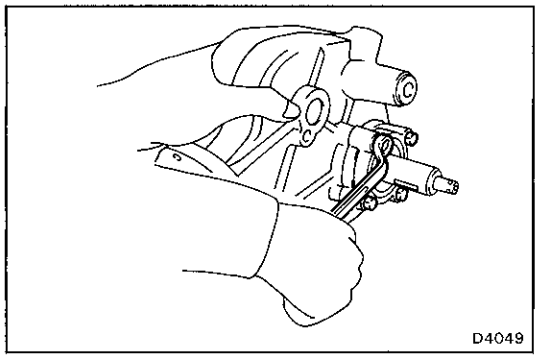

7. REMOVE BEARING RETAINER

(a) Remove the four bolts.

(b) Remove the bearing retainer and gasket.

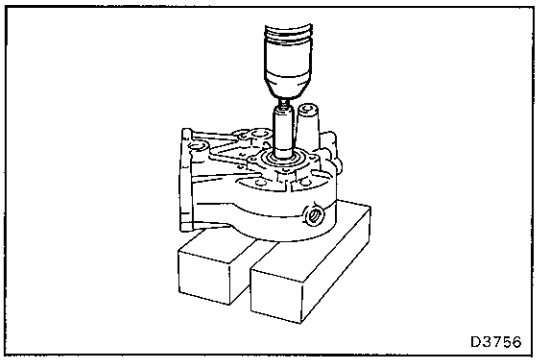

8. REMOVE OUTPUT GEAR AND SHAFT

Using a press, remove the front bearing, two spacers, output gear and shaft.

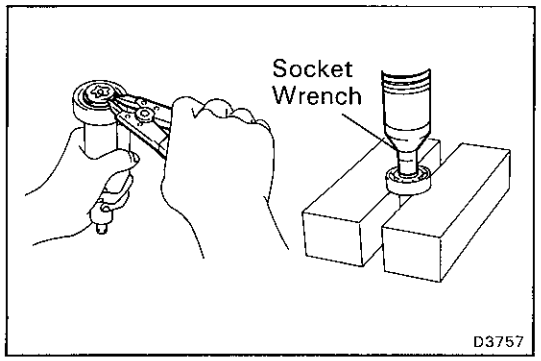

9. REMOVE REAR BEARING FROM OUTPUT SHAFT

(a) Using snap ring pliers, remove the snap ring.

(b) Using a press and 17 mm socket wrench, remove the bearing.

INSPECTION OF P.T.O. COMPONENTS

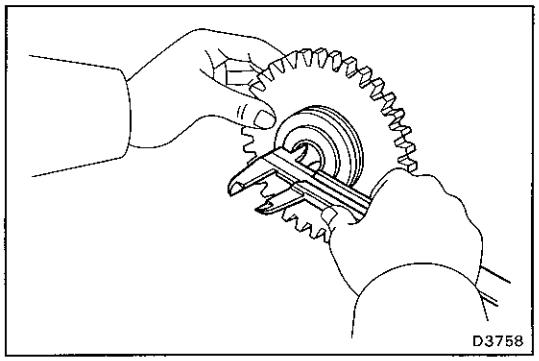

1. INSPECT INPUT GEAR BUSHING

Using calipers, measure the bushing bore.

Maximum bore: 20.1 mm (0.791 in.)

If the bushing bore is greater than the maximum, replace the input gear assembly.

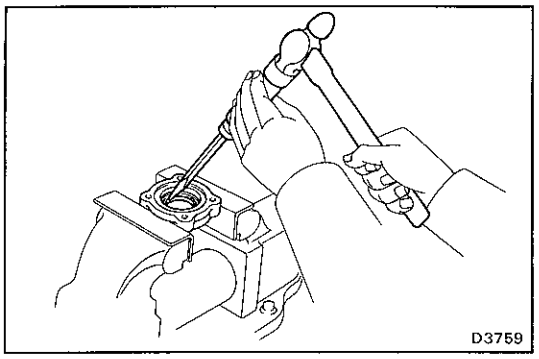

2. REPLACE BEARING RETAINER OIL SEAL

(a) Using a screwdriver, tap out the oil seal.

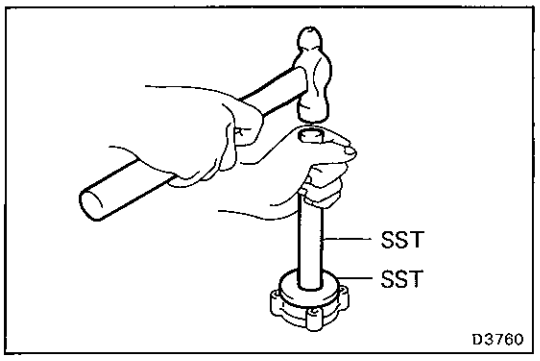

(b) Using SST, install a new oil seal.

SST 09608-35013

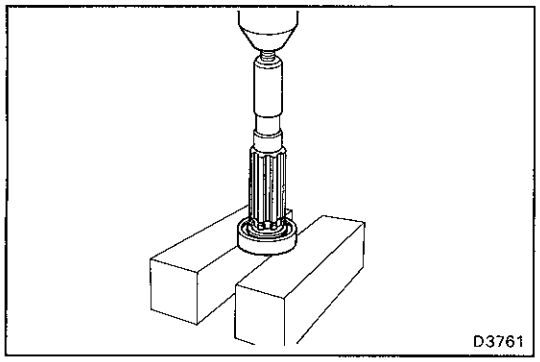

ASSEMBLY OF P.T.O.

(See page WI-2)

1. INSTALL REAR BEARING TO OUTPUT SHAFT

(a) Using a press, install the bearing to the shaft.

(b) Using snap ring pliers, install the snap ring.

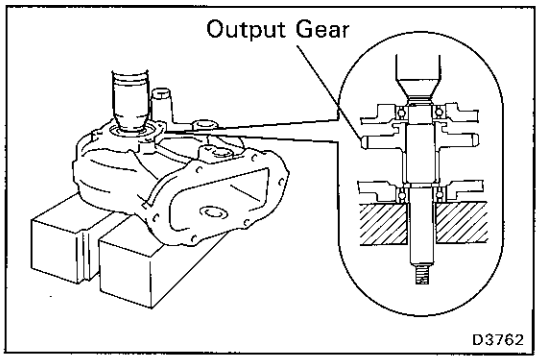

2. INSTALL OUTPUT GEAR AND SHAFT

(a) Install front bearing, output gear and two spacers to the case as shown.

(b) Put the output shaft into the front bearing through the output gear and two spacers.

(c) Using a press, press the output shaft into the front bearing.

HINT: Install in proper direction only.

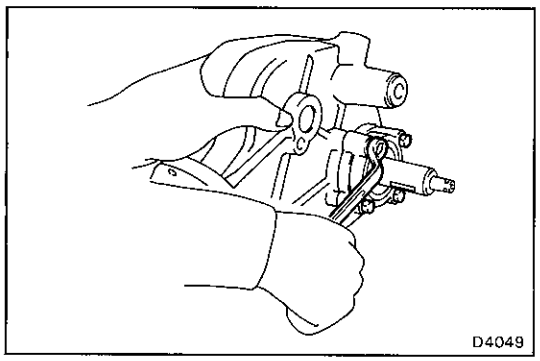

3. INSTALL BEARING RETAINER

(a) Install a new gasket and bearing retainer.

(b) Install and torque the four bolts.

Torque: 195 kg-cm (14 ft-lb, 19 N·m)

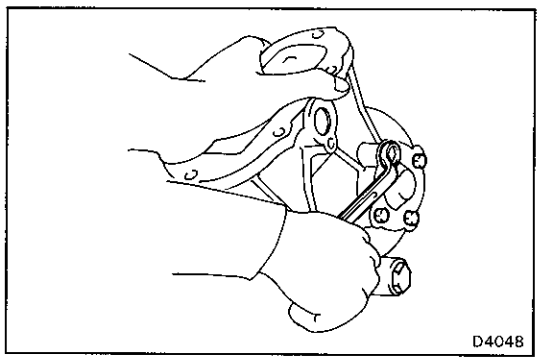

4. INSTALL P.T.O. COVER

(a) Install a new gasket and the cover.

(b) Install and torque the four bolts.

Torque: 75 kg-cm (65 in.-lb, 7.4 N·m)

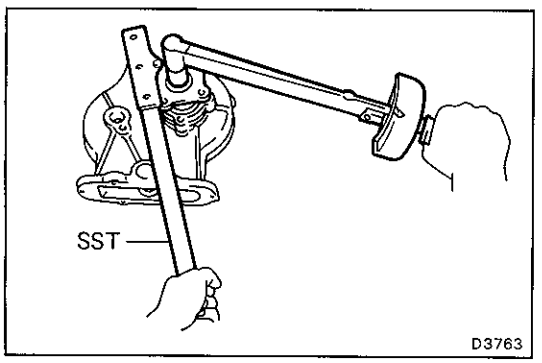

5. INSTALL UNIVERSAL JOINT FLANGE

(a) Install the woodruff key, flange an washer.

(b) Using SST to hold the flange, install and torque the nut.

SST 09330-00021

Torque: 480 kg-cm (35 ft-lb, 47 N·m)

(c) Install a new cotter pin.

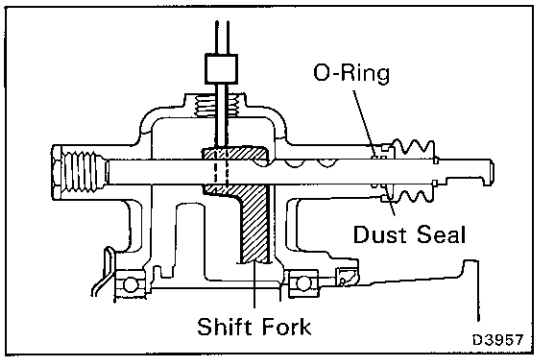

6. INSTALL SHIFT FORK AND SHAFT

(a) Apply MP grease to the O-ring and then install it.

(b) Install the dust seal.

(c) Put the shift fork into the case and install the shift shaft into the case through the shift fork.

HINT: Install in proper direction only.

(d) Using a pin punch and hammer, drive in the slotted spring pin.

(e) Install the dust boot.

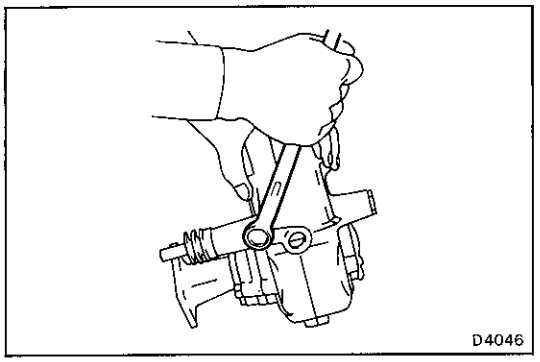

7. INSTALL LOCKING BALL, SPRING, NEW GASKET AND BOLT

Torque: 130 kg-cm (9 ft-lb, 13 N·m)

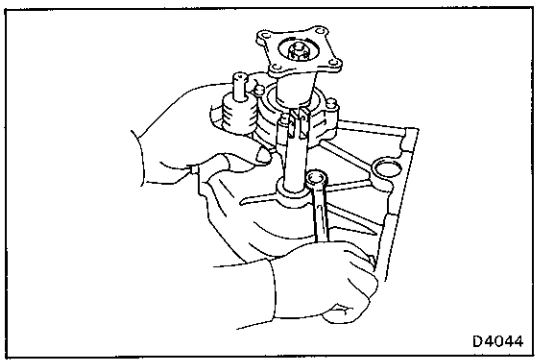

8. INSTALL IDLER SHAFT

(a) Apply MP grease to the O-rings and install the O-rings to the shaft.

(b) Install the shaft into the case with the lock plate.

(c) Install and torque the bolt.

HINT: Be careful not to damage the O-ring.

Torque: 130 kg-cm (9 ft-lb, 13 N·m)

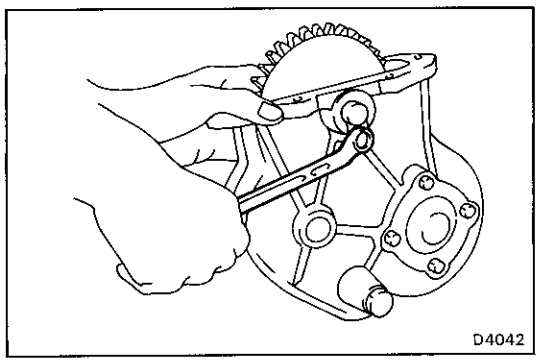

9. INSTALL INPUT GEAR AND SHAFT

(a) Apply MP grease to the O-ring and install the O-ring to the shaft.

(b) Put the input gear to the shift fork.

HINT: Install in proper direction only.

(c) Install the input gear shaft into the case through the input gear.

(d) Install the lock plate.

(e) Install and torque the bolt.

Torque: 130 kg-cm (9 ft-lb, 13 N·m)

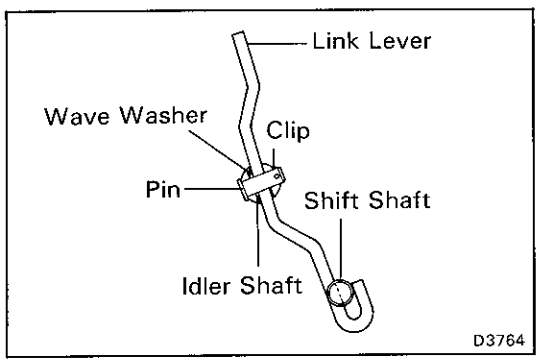

10. INSTALL LINK LEVER

(a) Align the notch of the shift shaft and the hook of the link lever.
Install the link lever onto the idle shaft together with a wave washer.

(b) Insert the pin and install the clip.

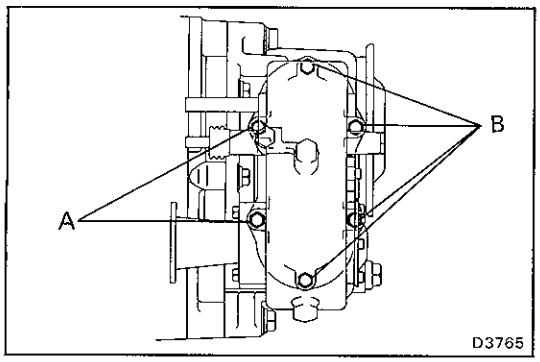

INSTALLATION OF P.T.O.

(See page WI-2)

1. INSTALL P.T.O.

   (a) Apply liquid sealer to the threads of the two front side bolts A.

   Sealant: Part No. 08833-00070, THREE BOND 1324 or equivalent

   (b) Install a new gasket and P.T.O. assembly.

   (c) Install and torque the six bolts.

   Torque:

   A Front side 170 kg-cm (12 ft-lb, 17 N·m)
   B Other side 195 kg-cm (14 ft-lb, 19 N·m)

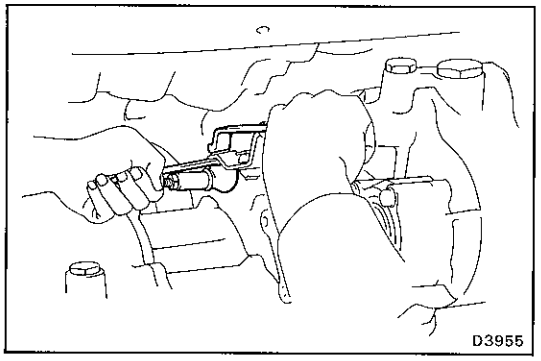

2. CONNECT P.T.O. SHIFT ROD

   Torque: 200 kg-cm (14 ft-lb, 20 N·m)

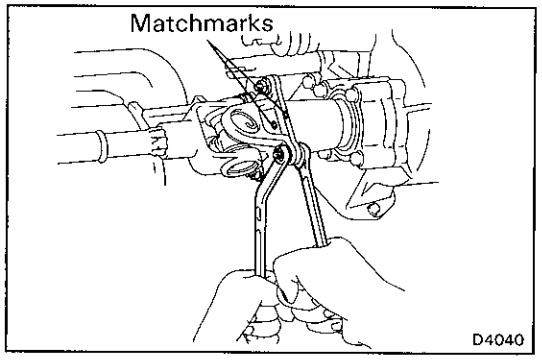

3. CONNECT P.T.O. DRIVE SHAFT

   (a) Align the matchmarks and connect the drive shaft.

   (b) Install and torque the bolts and nuts.

   Torque: 200 kg-cm (14 ft-lb, 20 N·m)

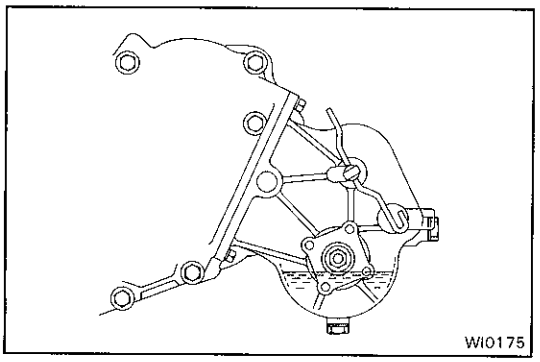

4. FILL P.T.O. WITH TRANSMISSION OIL

   Oil grade: API service GL-4 or GL-5
   SAE 75W — 90

   Capacity: about 0.5 liter (0.5 US qts, 0.4 Imp.qts)