Winch Assembly

REMOVAL AND INSTALLATION OF WINCH ASSEMBLY

Remove and install the parts as shown.

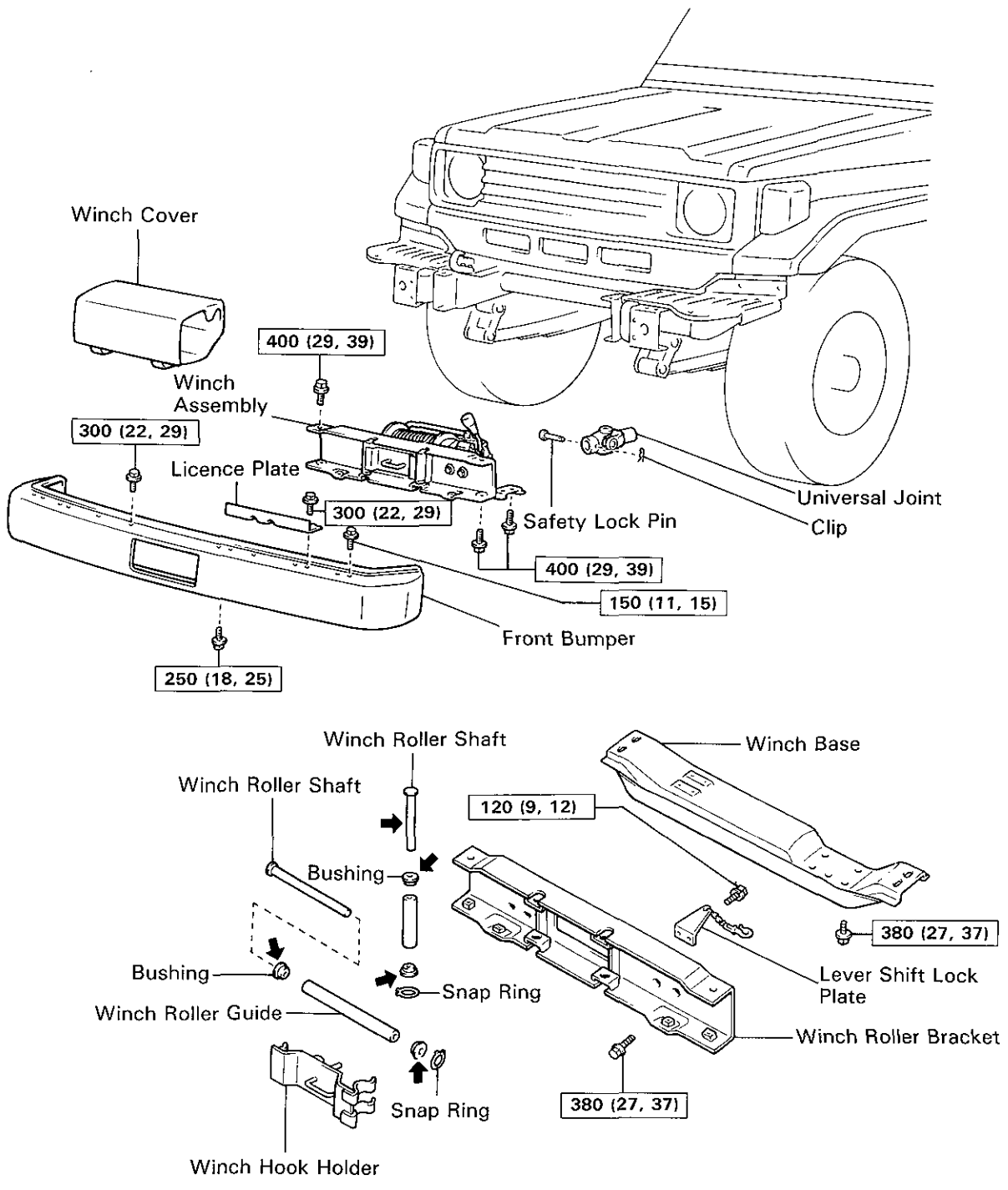

kg-cm (ft-lb, N·m) : Specified torque

➡ MP grease coating portion

WI0160

COMPONENTS

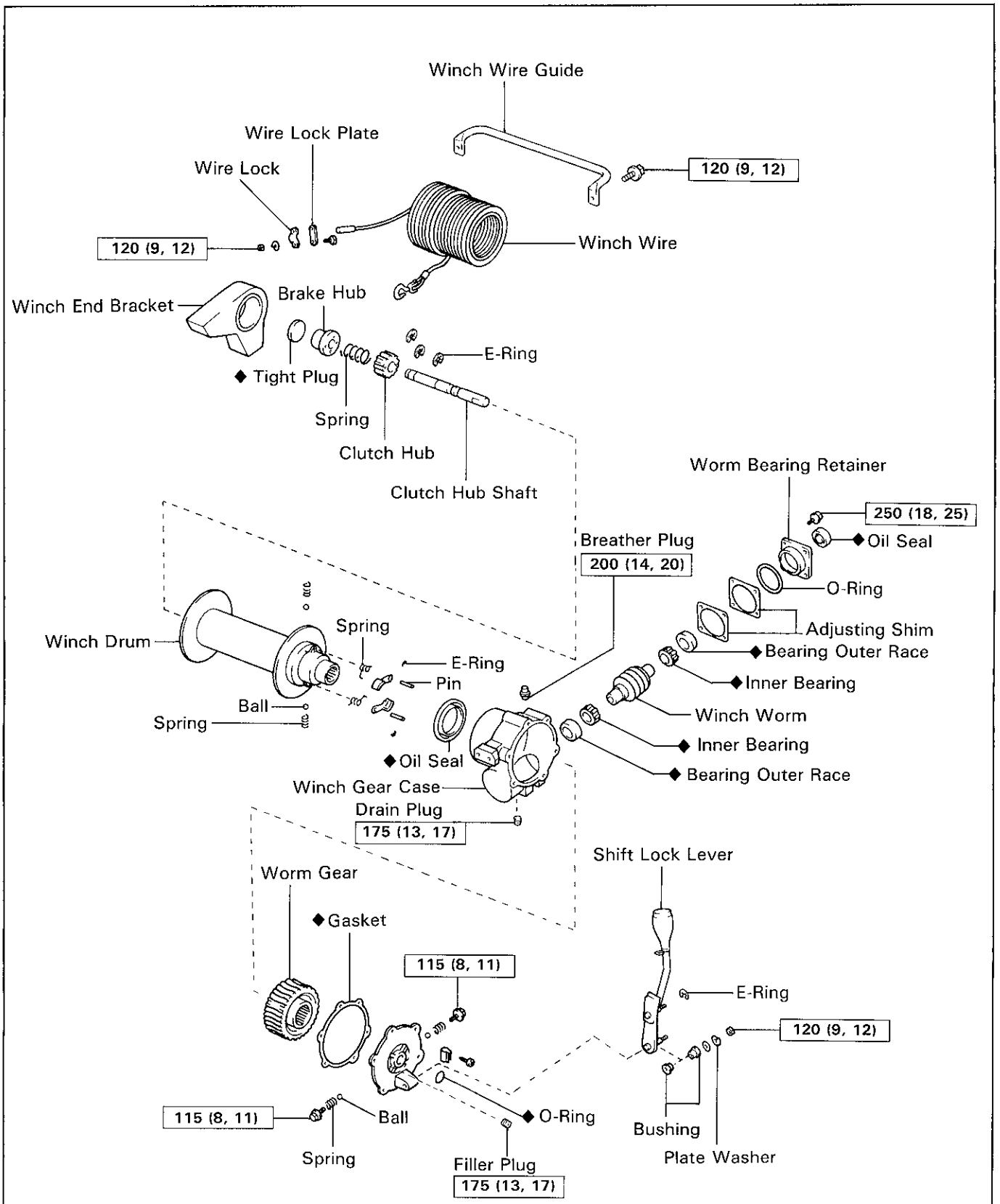

kg-cm (ft-lb, N·m) : Specified torque

◆ Non-reusable part

WI0152

DISASSEMBLY OF WINCH ASSEMBLY

(See page WI-21)

1. DRAIN WINCH FLUID
2. REMOVE WINCH WIRE GUIDE
3. REMOVE WINCH END BRACKET

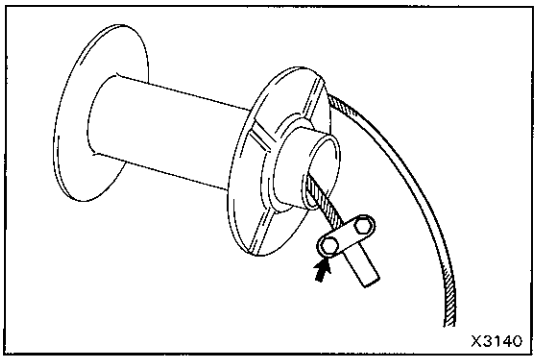

4. REMOVE WINCH WIRE
   (a) Remove the two bolts, spring washers and nuts.
   (b) Remove the wire lock and lock plate from the winch wire.

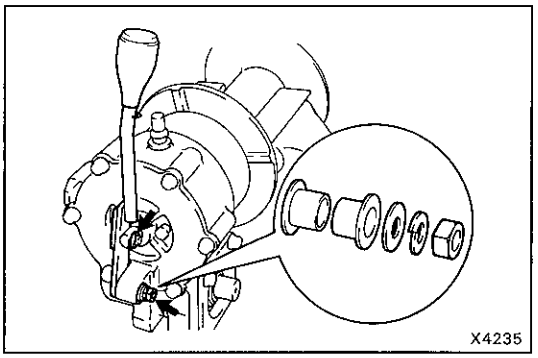

5. REMOVE SHIFT LOCK LEVER
   (a) Remove the nut, spring washer and plate washer.
   (b) Remove the E-ring and the shift lock lever.
   (c) Remove the two bushings from the shift lock lever.

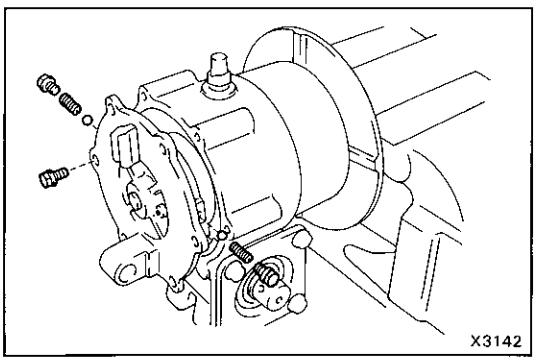

6. REMOVE WINCH GEAR CASE COVER
   (a) Remove the six bolts.
   (b) Tap the gear case cover with a plastic hammer.
   (c) Pull out the gear case cover until you can see the ball of clutch hub shaft and the bolt.
   (d) Remove the two bolts, the two balls and the two springs.
   (e) Remove the gear case cover and gasket.
   (f) Remove the O-ring from the gear case cover.

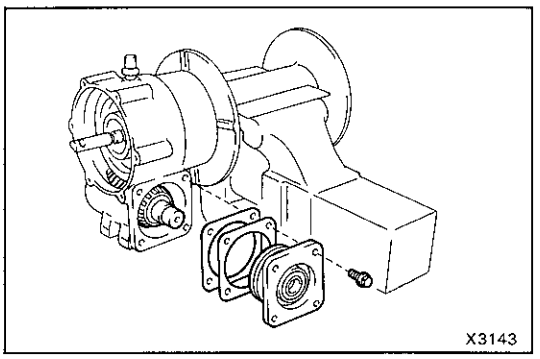

7. REMOVE WINCH WORM
   (a) Remove the four bolts.
   (b) Using a plastic hammer, remove the worm bearing retainer and the adjusting shims.
   (c) Remove the winch worm.
   (d) Remove the O-ring from the worm bearing retainer.

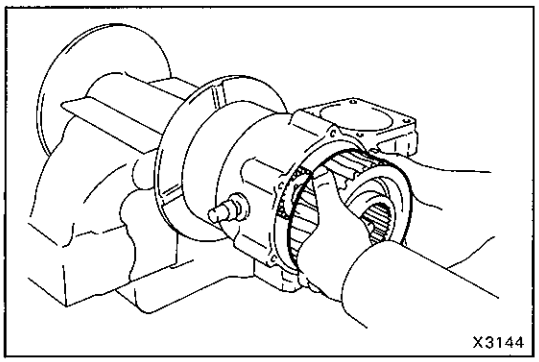

8. REMOVE WORM GEAR

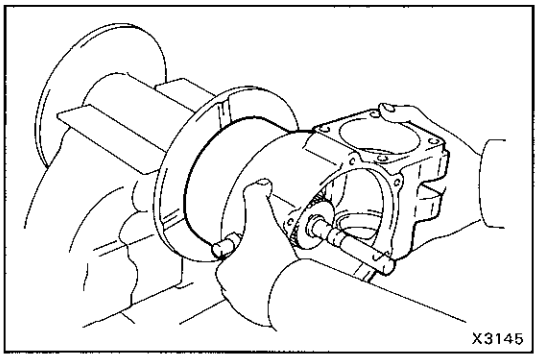

9. REMOVE WINCH GEAR CASE

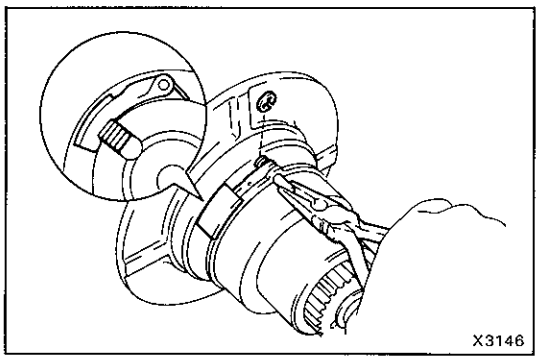

10. REMOVE WINCH BRAKE

(a) Remove the two E-rings.

(b) Pull out the two pins.

(c) Remove the two torsion springs and the two winch brakes.

(d) Remove the two springs and the two balls from the winch drum.

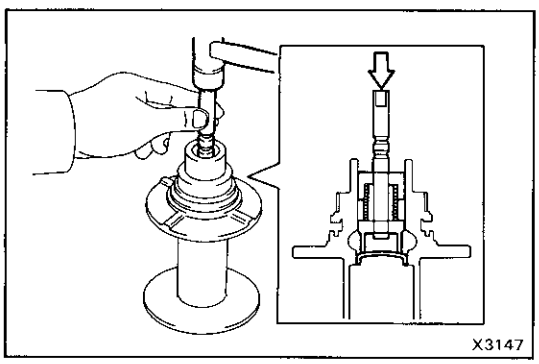

11. REMOVE CLUTCH HUB SHAFT

(a) Using a plastic hammer, tap the top of the clutch hub shaft.

(b) Remove the tight plug.

(c) Pull out the clutch hub shaft from the winch drum.

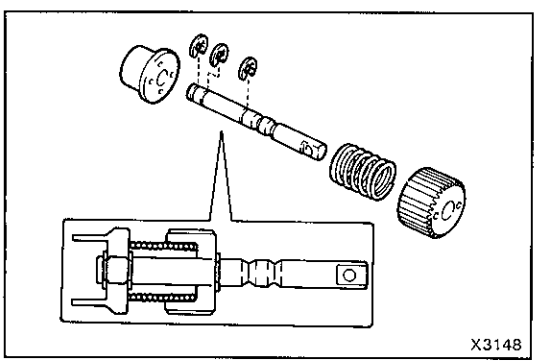

(d) Remove the three E-rings.

(e) Remove the clutch hub, the spring and the brake hub from the clutch hub shaft.

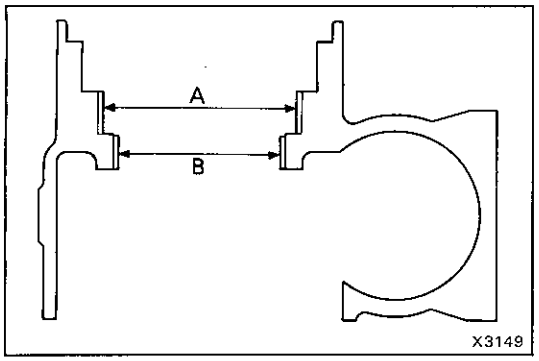

INSPECTION AND REPLACEMENT OF WINCH ASSEMBLY

1. INSPECT GEAR CASE

Using a caliper gauge, measure the bushing bore.

Standard bore:

A: 90.000 — 90.035 mm (3.5433 — 3.5447 in.)
B: 75.000 — 75.030 mm (2.9528 — 2.9539 in.)

Maximum bore:

A: 90.3 mm (3.555 in.)
B: 75.3 mm (2.965 in.)

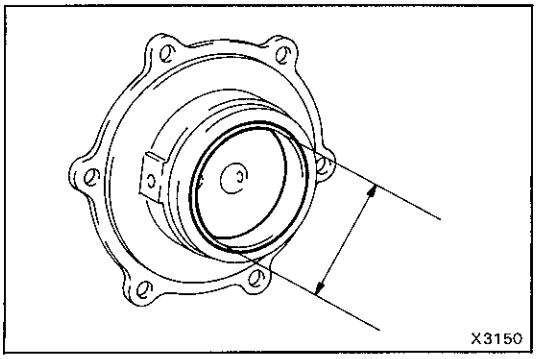

2. INSPECT WINCH GEAR CASE COVER

Using calipers, measure the bushing bore.

Standard bore:

65.000 — 65.030 mm (2.5591 — 2.5602 in.)

Maximum bore:

65.3 mm (2.571 in.)

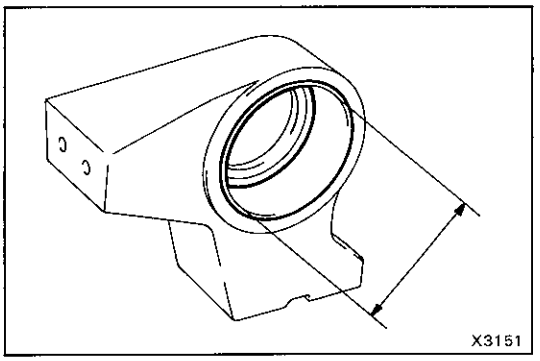

3. INSPECT WINCH END BRACKET

Using calipers, measure the bushing bore.

Standard bore:

75.000 — 75.030 mm (2.9528 — 2.9539 in.)

Maximum bore:

75.2 mm (2.961 in.)

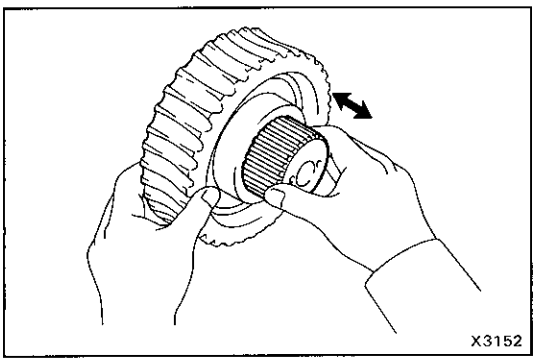

4. INSPECT WORM GEAR

(a) Inspect the worm gear for wear or damage.
(b) Install the clutch hub to the worm gear.
(c) Inspect that the clutch hub moves smoothly.

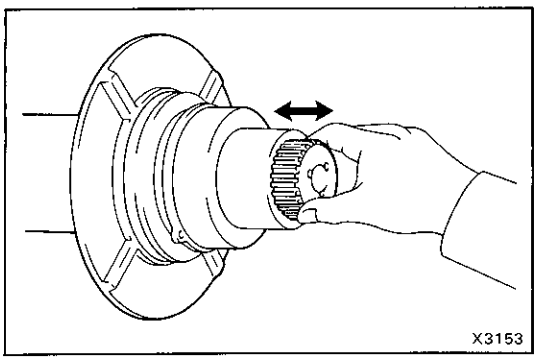

5. INSPECT WINCH DRUM AND CLUTCH HUB

(a) Install the clutch hub to the winch drum.
(b) Inspect that the clutch hub moves smoothly.

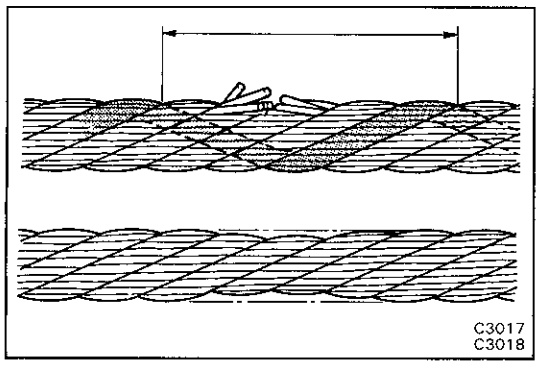

6. INSPECT WINCH WIRE

Inspect the winch wire for the following items. If damaged, replace the winch wire.

- More than 12 severed strands per wind.
- Wire diameter of less than 7.5 mm (0.295 in.)

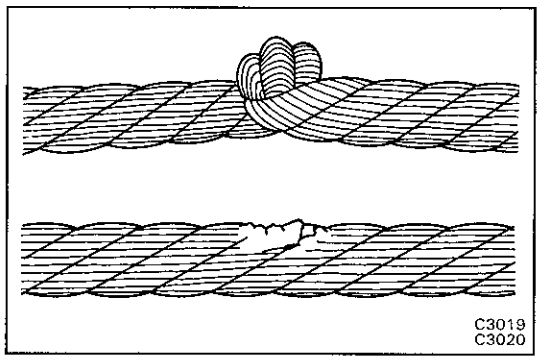

- Kinks
- Corrosion
- Fraying

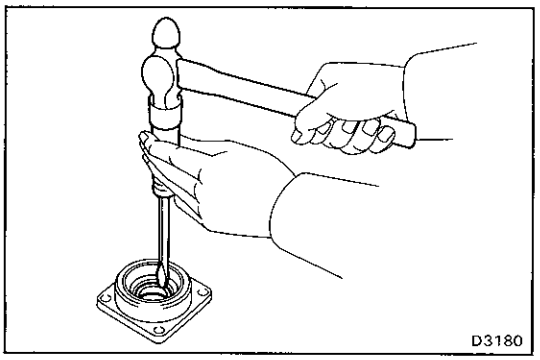

7. REPLACE WORM BEARING RETAINER OIL SEAL

(a) Using a screwdriver, tap out the oil seal.

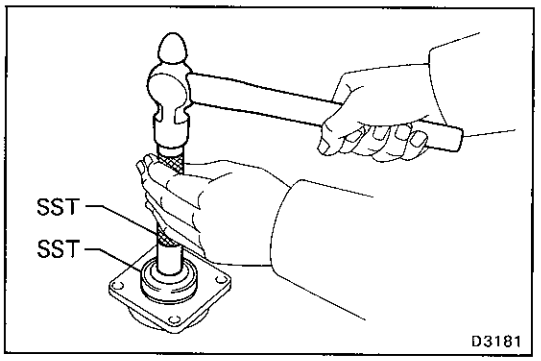

(b) Using SST, install a new oil seal.

SST 09608-35014 (09608-06020, 09608-06090)

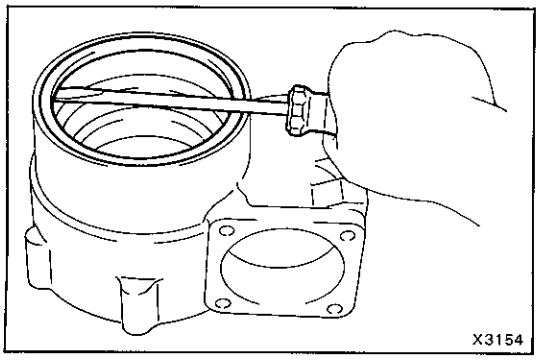

8. REPLACE WINCH GEAR CASE OIL SEAL

(a) Using a screwdriver, pry off the oil seal.

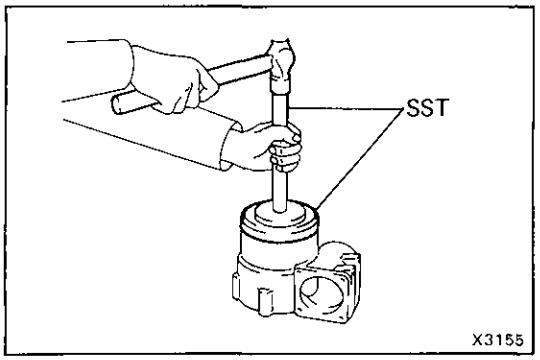

(b) Using SST, install a new oil seal.

SST 09550-55010 (09550-05020, 09550-05070)

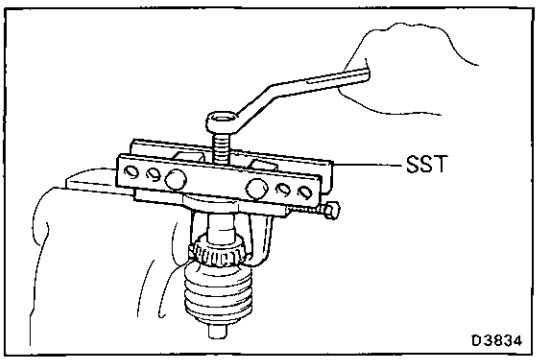

9. REPLACE WORM BEARING

(a) Using SST, remove the inner bearing.

SST 09950-20017

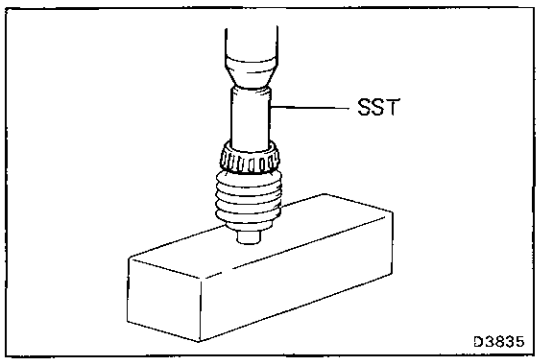

(b) Using a press and SST, press in a new inner bearing.

SST 09632-36010

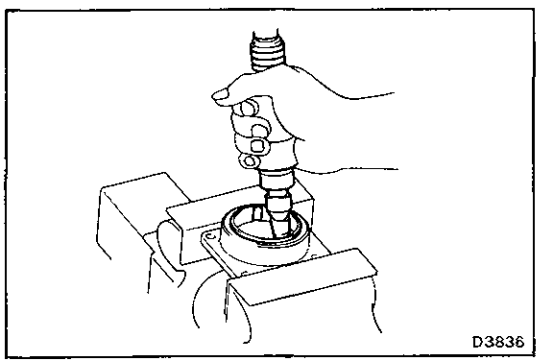

(c) Using a little air grinder, grind the bearing outer race (worm bearing retainer side).

HINT: Be careful not to damage the bearing retainer.

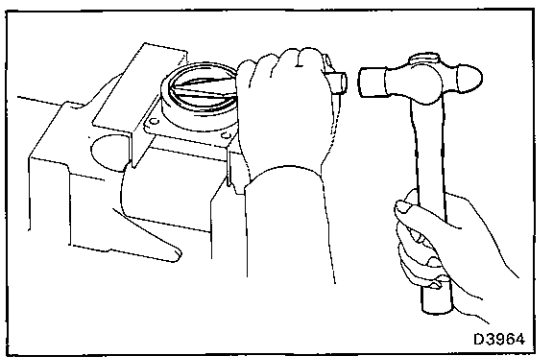

(d) Using a chisel and hammer, remove the bearing outer race (worm bearing retainer side).

HINT: Be careful not to damage the bearing retainer.

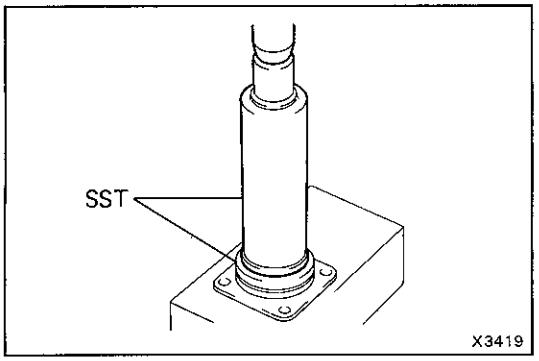

(e) Using SST and a press, press in a new outer race (worm bearing retainer side).

SST 09316-60010 (09316-00010, 09316-00070)

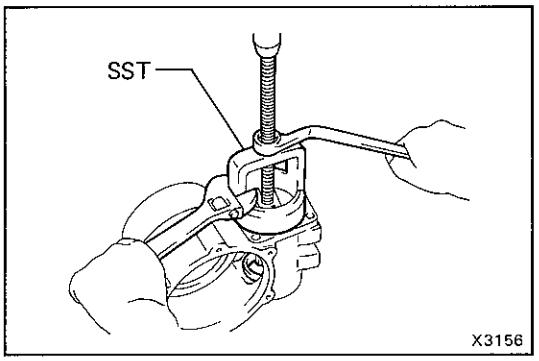

(f) Using SST, remove the bearing outer race (gear case side).

SST 09612-65014 (09612-01030, 09612-01050)

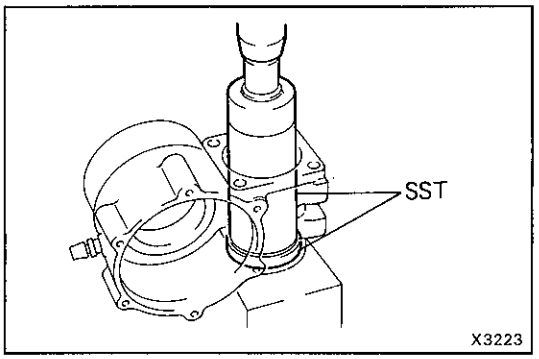

(g) Using SST and a press, press in a new outer race (gear case side).

SST 09316-60010 (09316-00010, 09316-00070)

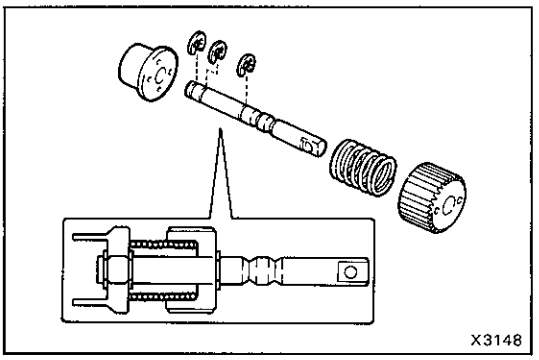

ASSEMBLY OF WINCH ASSEMBLY

(See page WI-21)

1. INSTALL CLUTCH HUB SHAFT

(a) Install the clutch hub, the spring and the brake hub to the clutch hub shaft with the three E-rings.

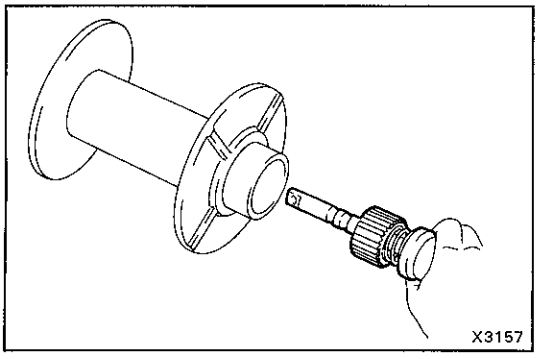

(b) Insert the clutch hub shaft into the winch drum from the winch end bracket side.

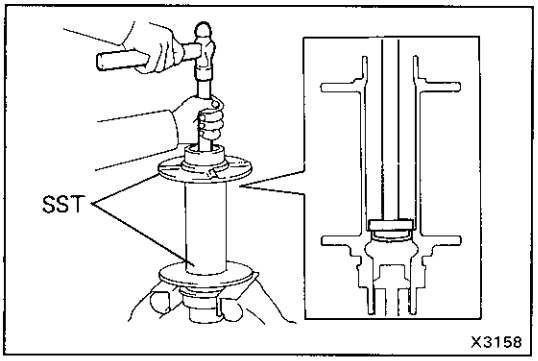

(c) Apply liquid sealer to a new tight plug.

Sealant: Part No. 08833-00070, THREE BOND 1324 or equivalent

(d) Using SST, install the tight plug.

SST 09608-35014 (09608-06100), 09631-12020

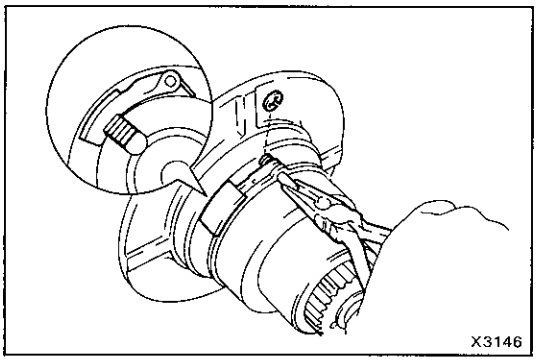

2. INSTALL WINCH BRAKE

(a) Install the two balls and the two springs to the winch drum.

(b) Align the spring with the notch of the winch brake, then install the two torsion springs and the two pins.

(c) Install the two E-rings.

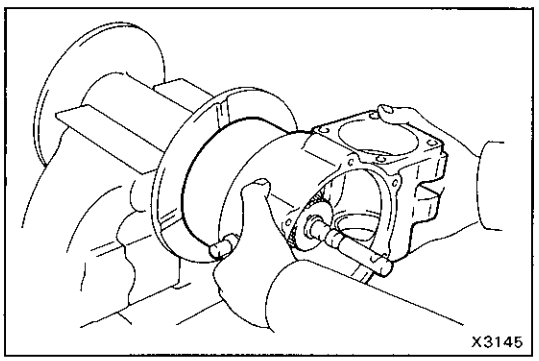

3. INSTALL WINCH GEAR CASE

Install the winch gear case to the winch drum.

HINT: Be careful not to damage the oil seal lip.

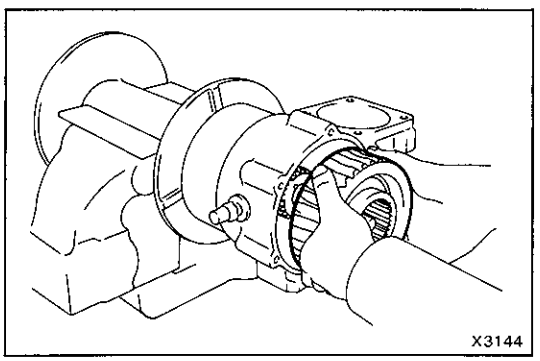

4. INSTALL WORM GEAR

Install the worm gear to the winch drum.

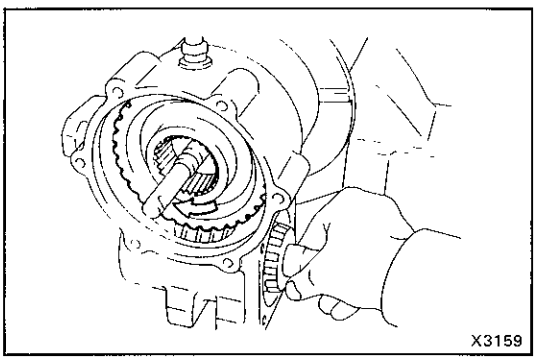

5. INSTALL WINCH WORM

(a) Install the winch worm to the worm gear.

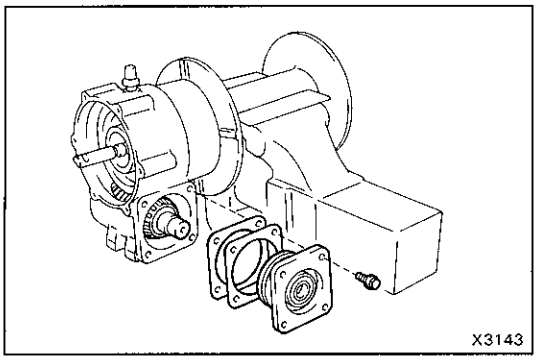

(b) Install a new O-ring to the worm bearing retainer.

(c) Install the adjusting shims and the worm bearing retainer with the four bolts. Torque the four bolts.

Torque: 250 kg-cm (18 ft-lb, 25 N·m)

HINT: Be careful not to damage the O-ring.

(d) Rocking the worm to and from, check for looseness or tightness.

(e) If necessary, exchange the shims for the correct sized shims with reference to the table.

Shim thickness: 0.228 mm (0.0090 in.)
0.5 mm (0.020 in.)
1.0 mm (0.039 in.)

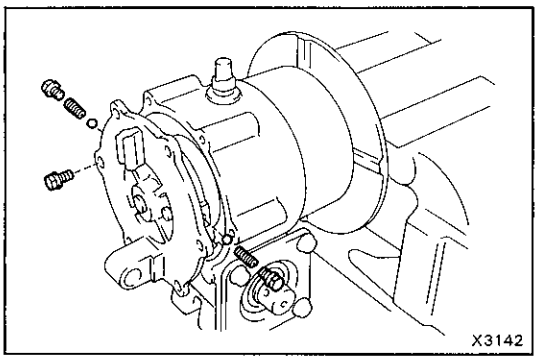

6. INSTALL WINCH GEAR CASE COVER

(a) Install a new O-ring to the gear case cover.

(b) Install a new gasket to the gear case.

(c) Insert the gear case cover about 30 mm (1.18 in.) in the clutch hub shaft and install two springs with two bolts.

Torque: 115 kg-cm (8 ft-lb, 11 N·m)

HINT: Be careful not to damage the O-ring.

(d) Install the gear case cover with the six bolts.

Torque: 120 kg-cm (9 ft-lb, 12 N·m)

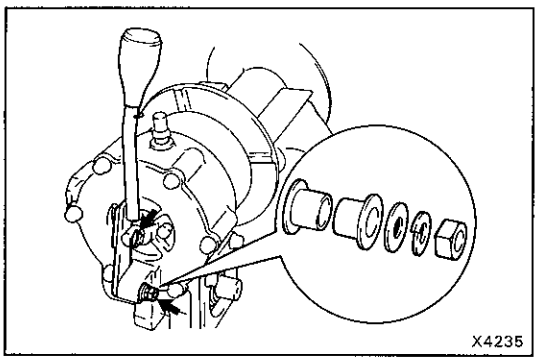

7. INSTALL SHIFT LOCK LEVER

(a) Install two bushings to the shift lock lever.

(b) Install the E-ring, plate washer, spring washer and nut to the shift lock lever.

Torque: 120 kg-cm (9 ft-lb, 12 N·m)

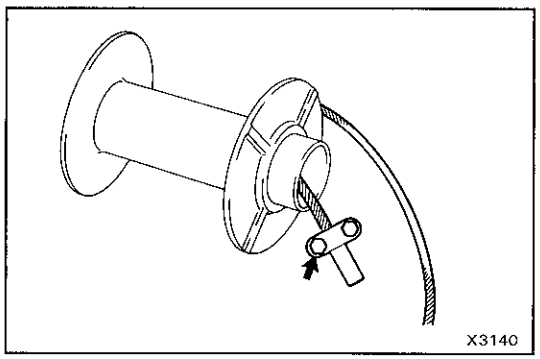

8. INSTALL WINCH WIRE

(a) Insert the winch wire into the wire installation hole of the drum and drum housing cover hole.

(b) Install the wire lock and lock plate to the end of winch wire with the two bolts, two spring washers and the two nuts. Torque the bolts.

Torque: 120 kg-cm (9 ft-lb, 12 N·m)

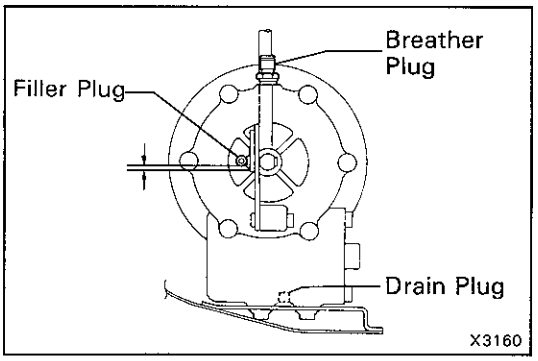

9. INSTALL WINCH END BRACKET

10. FILL WINCH WITH GEAR OIL

(a) Install the drain plug.

Torque: 175 kg-cm (13 ft-lb, 17 N·m)

(b) Remove the filler plug and the breather plug.

(c) Fill the winch with gear oil until the distance between the filler plug hole and fluid surface becomes less than 5 mm (0.2 in.)

Oil grade: API GL-4
SAE 85W-90

Capacity: 0.3 liters (0.32 US qts, 0.26 Imp.qts)

(d) Install the filler plug and torque it.

Torque: 175 kg-cm (13 ft-lb, 17 N·m)

(e) Install the breather plug and torque it.

Torque: 200 kg-cm (15 ft-lb, 20 N·m)