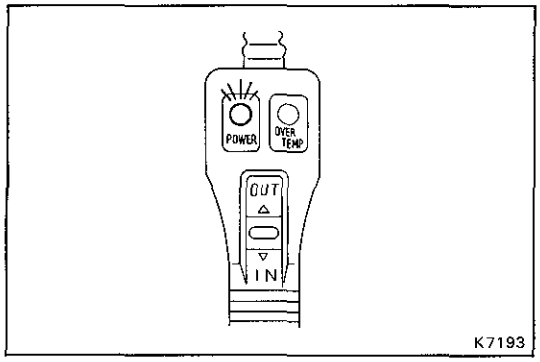

ELECTRIC WINCH

On-Vehicle Inspection

INSPECTION OF WINCH REMOTE CONTROL SWITCH

1. **CONNECT WINCH CONTROL SWITCH CONNECTOR**

2. **INSPECT WINCH CONTROL SWITCH**

   (a) The power indicator light will light when the winch turns ignition switch ON.

   (b) Operate winch control switch, confirm winch function.

   HINT: Be careful not to tighten or strain the winch wire.

   (c) Turn ignition switch OFF.

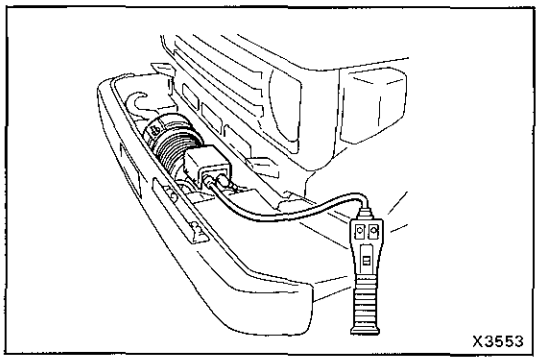

3. **INSPECT OVERHEAT TEMPERATURE INDICATOR**

   (a) Remove the four screws and the cover.

   (b) Disconnect the connector of magnet switch No.2.

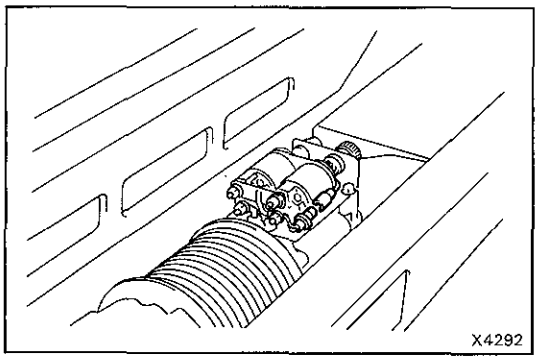

   (c) When ignition switch ON, the overheat temperature indicator light will light and buzzer sound.

   (d) Turn ignition switch OFF.

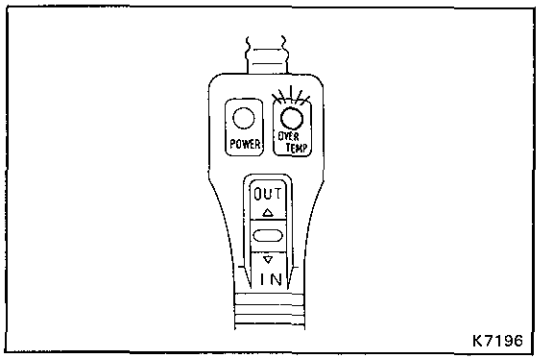

   (e) Connect the connector.

   (f) Install the four screws and the cover.

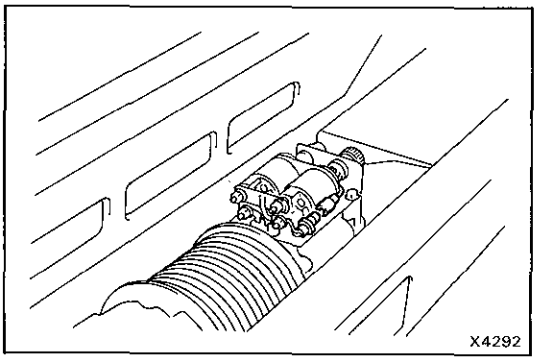

4. **DISCONNECT WINCH CONTROL SWITCH CONNECTOR**

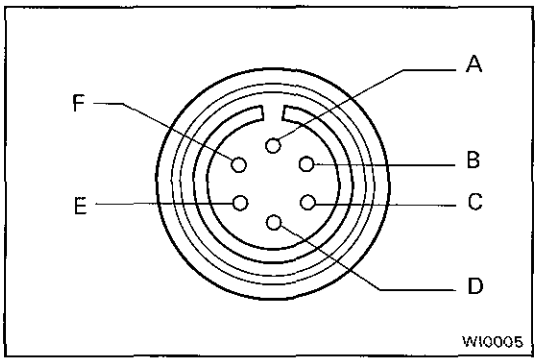

5. CHECK WINCH REMOTE CONTROL SWITCH CIRCUIT

Check that there is continuity between terminals.

SW Position \ Terminal	A	B	C	D	E	F
NEUTRAL	○—◀—○	○				
		○—○				
		○			○	
IN		○—○				
		○		○		
OUT		○—○				
		○				○

If there is no continuity, replace the remote control switch.