Winch Assembly

COMPONENTS

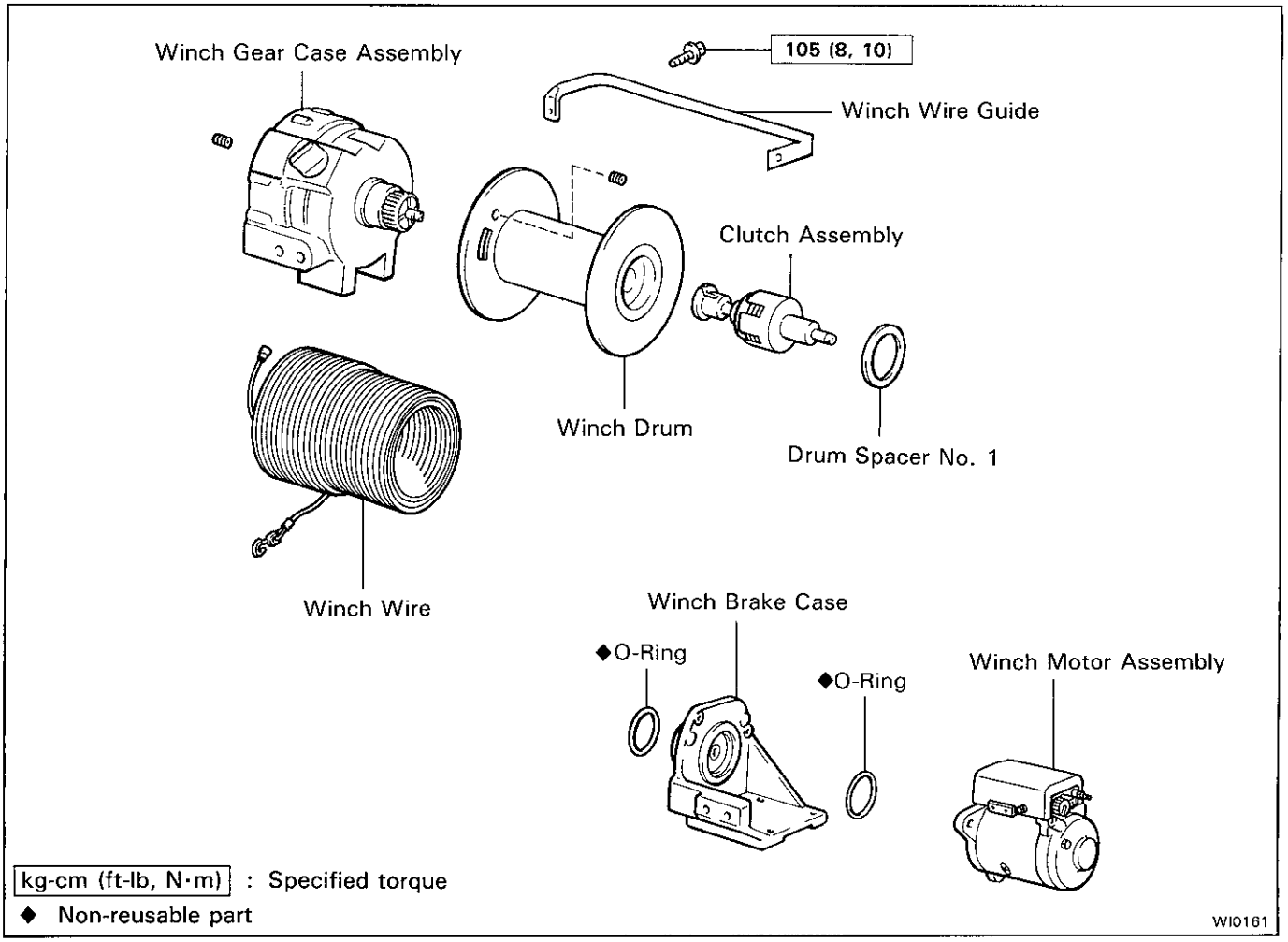

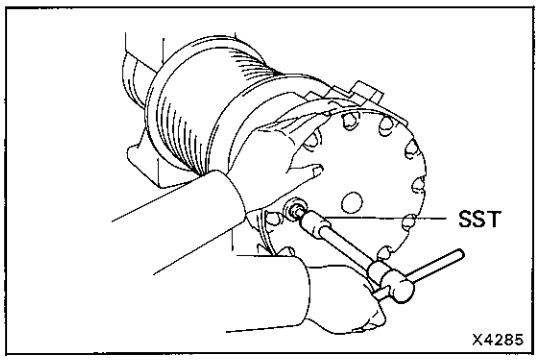

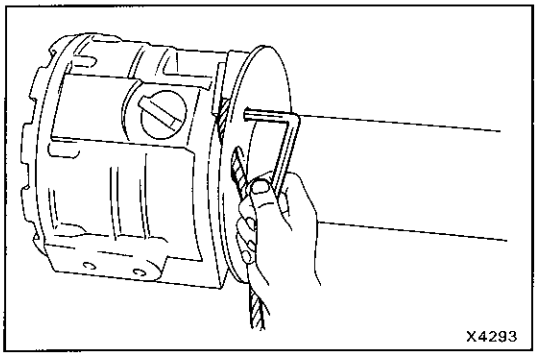

REMOVAL OF WINCH ASSEMBLY

1. **DRAIN WINCH FLUID**
   (a) Using SST, remove the drain plug.
   SST 09313-30021
   (b) Drain the winch fluid.

2. **REMOVE WINCH WIRE GUIDE**

3. **REMOVE WINCH WIRE**
   (a) Shift the shift lever to the neutral position.
   (b) Pull out the winch wire from the drum.
   (c) Using a hexagon wrench, remove the bolt.
   (d) Remove the winch wire.

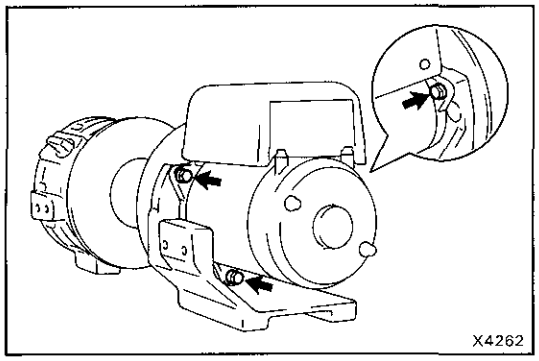

4. REMOVE WINCH MOTOR ASSEMBLY

Remove the three bolts, the winch motor assembly and the O-ring.

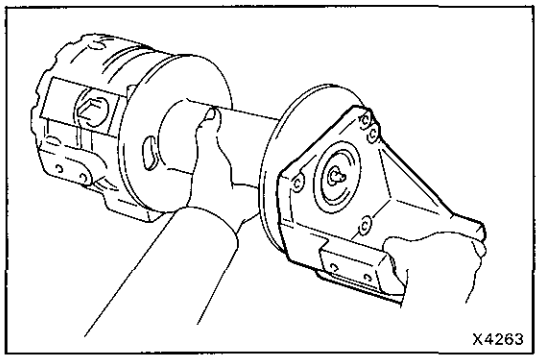

5. REMOVE WINCH BRAKE CASE

Remove winch brake case, the O-ring and drum spacer No.1.

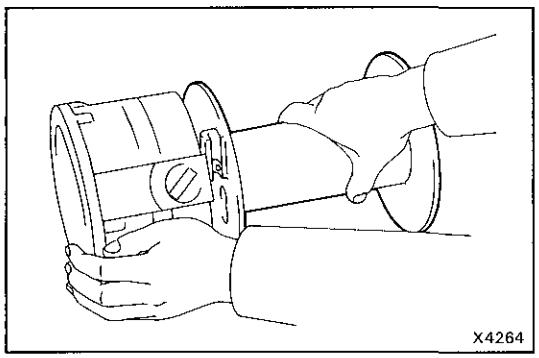

6. REMOVE WINCH DRUM

(a) Remove the clutch assembly.

(b) Remove the winch drum from the gear case assembly.

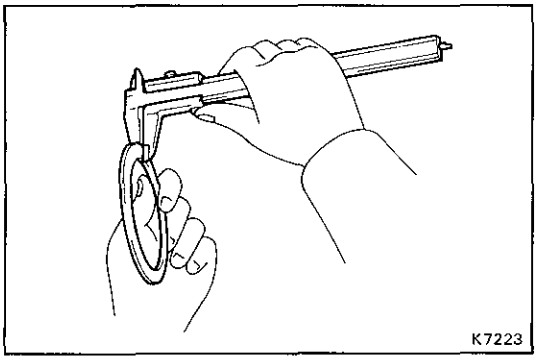

INSPECTION OF WINCH ASSEMBLY

1. INSPECT DRUM SPACER NO.1

Using calipers, measure the thickness of drum spacer No.1.

Standard bore: 1.4 mm (0.0551 in.)

Minimum bore: 1.0 mm (0.0394 in.)

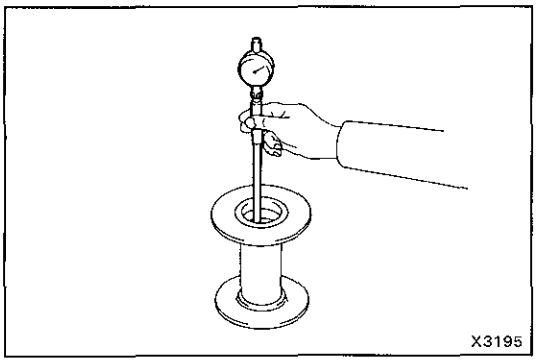

2. INSPECT WINCH DRUM

Using a cylinder gauge, measure the each side bushing bore.

Standard bore: 64.20 mm (2.5276 in.)

Maximum bore: 64.36 mm (2.5339 in.)

INSTALLATION OF WINCH ASSEMBLY

(See page WI-34)

1. COAT MP GREASE ON FOLLOWING PARTS:

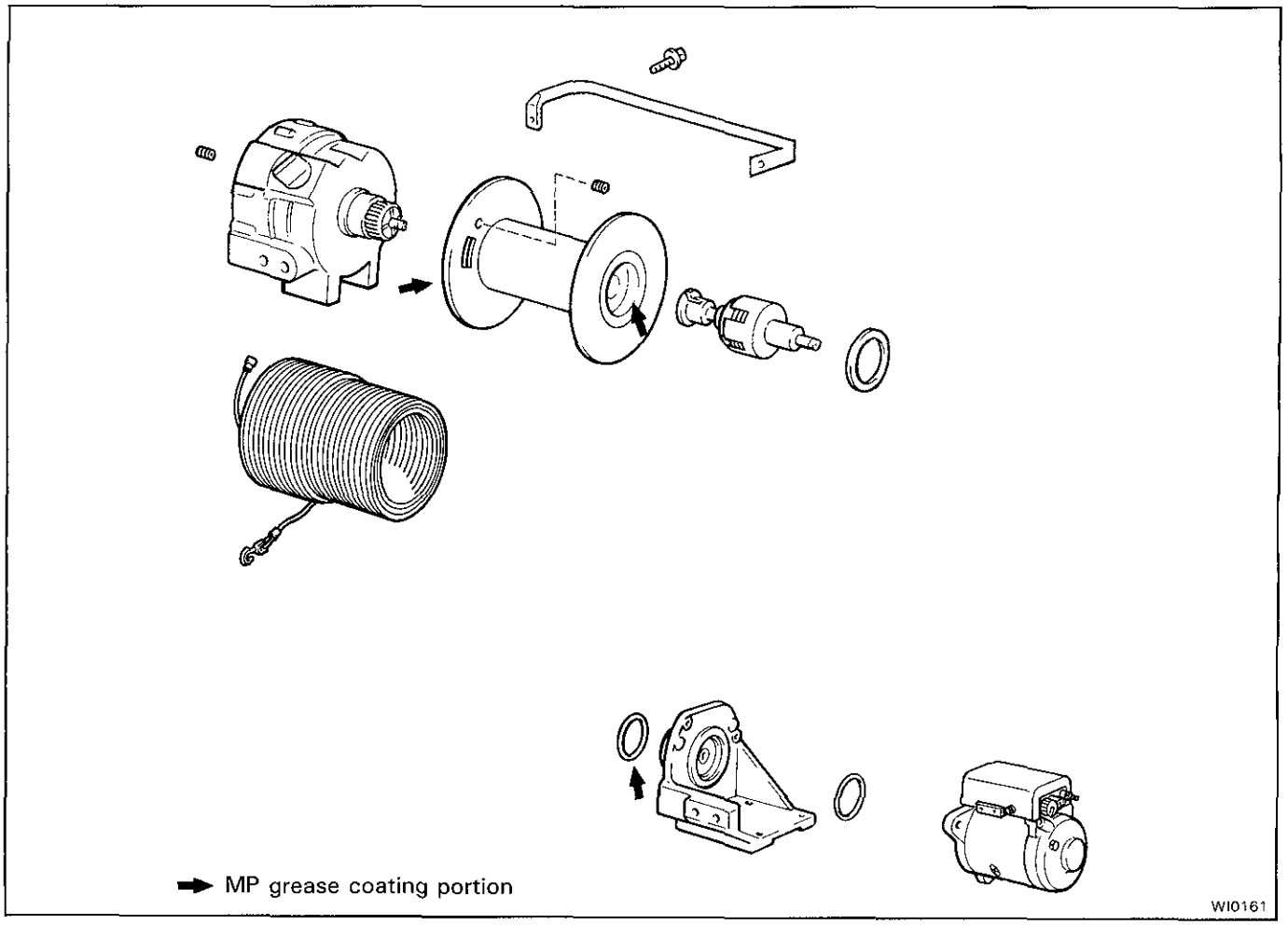

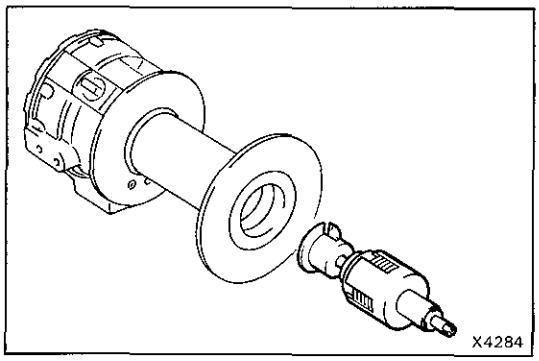

2. INSTALL WINCH DRUM
   (a) Install the winch drum to the gear case.
   (b) Install the clutch assembly.

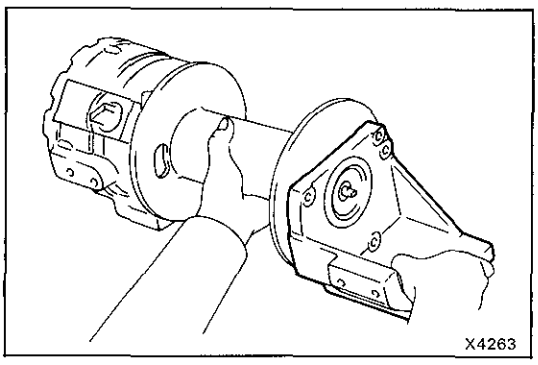

3. INSTALL WINCH BRAKE CASE

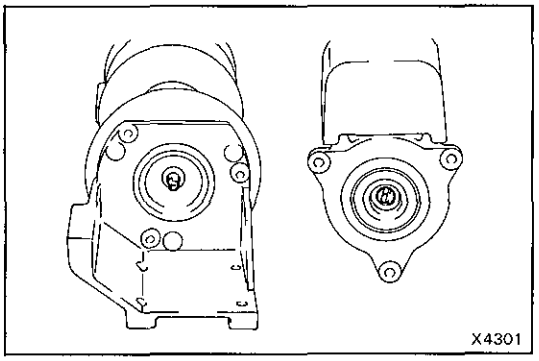

4. INSTALL WINCH MOTOR ASSEMBLY

(a) Align the groove and the tip of the input shaft.

(b) Torque the three bolts.

Torque: 400 kg-cm (29 ft-lb, 39 N·m)

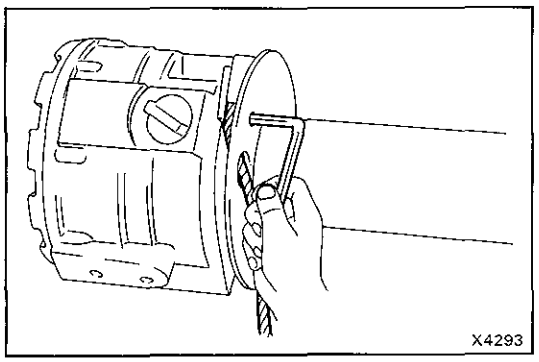

5. INSTALL WINCH WIRE

(a) Install the winch wire to the winch drum.

(b) Using a hexagon wrench, install the bolt.

Torque: 10 kg-cm (9 in.-lb, 1.0 N·m)

(c) Wind the winch wire around the winch drum.

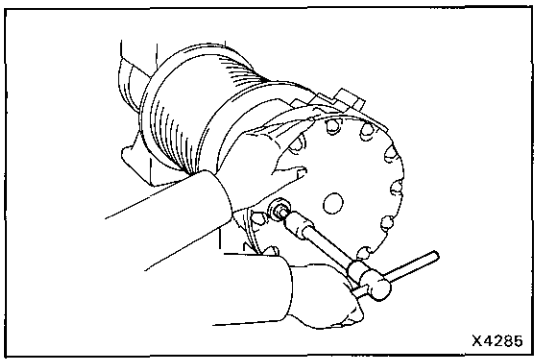

6. FILL WINCH WITH AUTOMATIC TRANSMISSION FLUID

Fill the winch with automatic transmission fluid and torque the drain plug.

Torque: 175 kg-cm (13 ft-lb, 17 N·m)
Oil grade: ATF Type F
Capacity: 0.9 liters (0.95 US qts, 0.79 Imp.qts)

7. WINCH WIRE GUIDE