Winch Motor

COMPONENTS

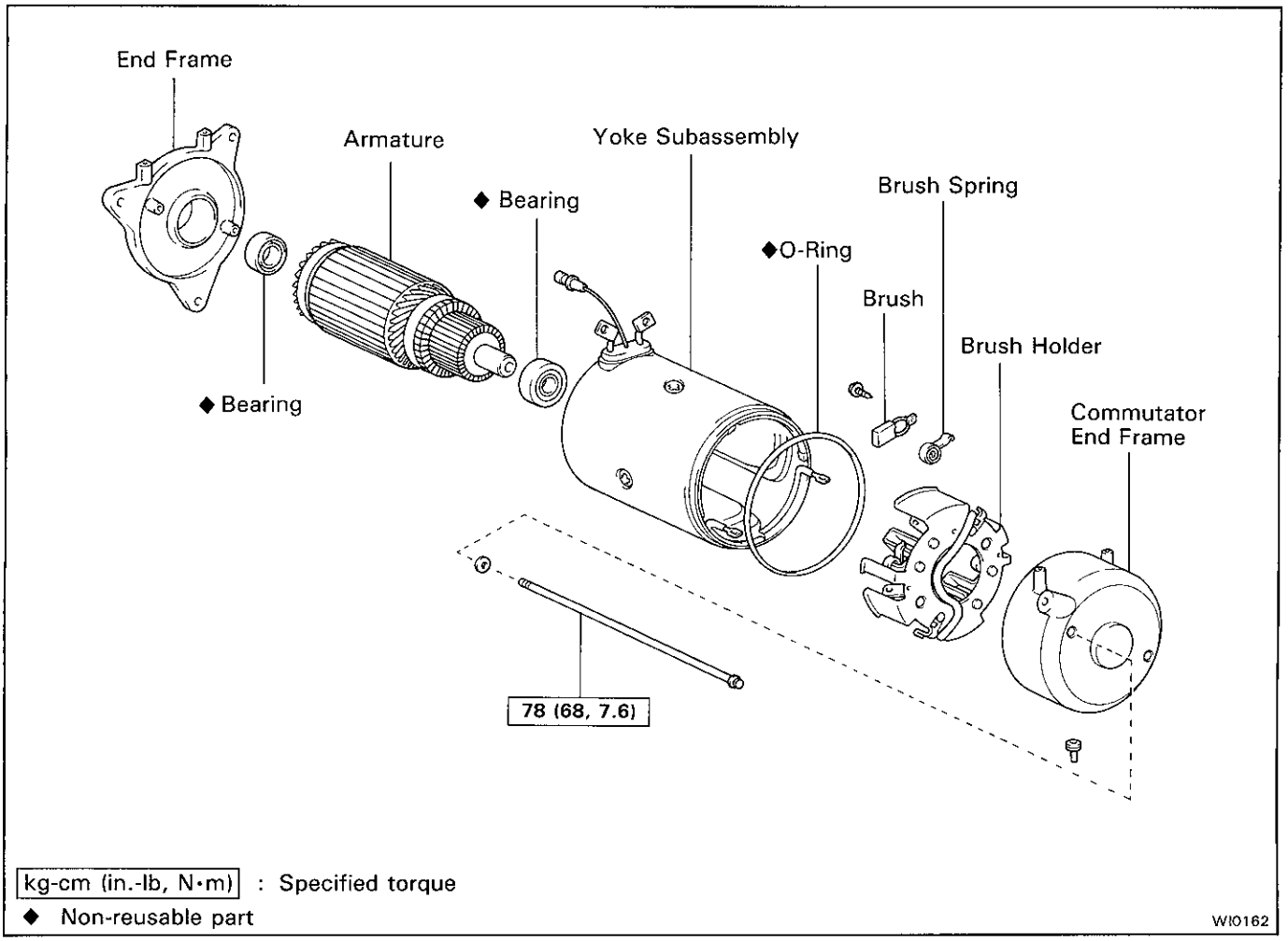

kg-cm (in.-lb, N•m) : Specified torque
◆ Non-reusable part

WI0162

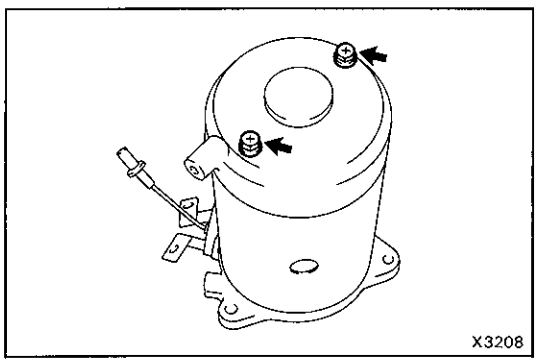

X3208

DISASSEMBLY OF WINCH MOTOR

1. REMOVE COMMUTATOR END FRAME

(a) Remove the two bolts.

(b) Remove the commutator end frame and O-ring.

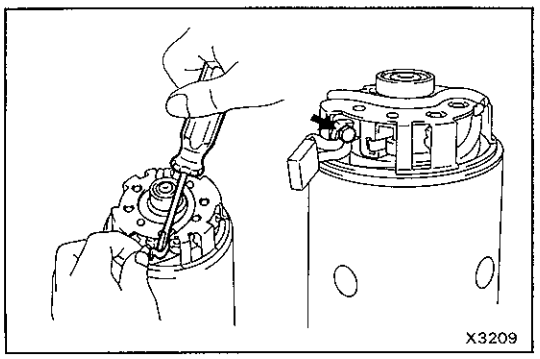

X3209

2. REMOVE BRUSHES

(a) Using a screwdriver, remove the negative brushes from the brush holder.

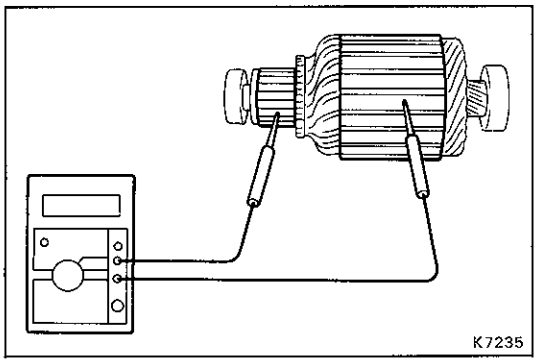

INSPECTION OF WINCH MOTOR

1. INSPECT THAT COMMUTATOR IS NOT GROUNDED

Using an ohmmeter, check that there is no continuity between the commutator and armature core. If there is continuity, replace the armature.

2. INSPECT COMMUTATOR FOR DIRTY OR BURNT SURFACE

If the surface is dirty or burnt, clean with sandpaper (No.400) or a lathe.

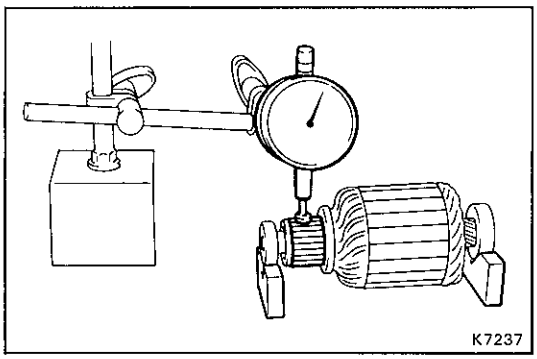

3. INSPECT COMMUTATOR CIRCLE RUNOUT

Using a dial indicator, measure the circle runout of the commutator. If the circle runout is greater than the maximum, correct with a lathe.

Standard runout: 0.05 mm (0.0020 in.) or less
Maximum runout: 0.2 mm (0.008 in.)

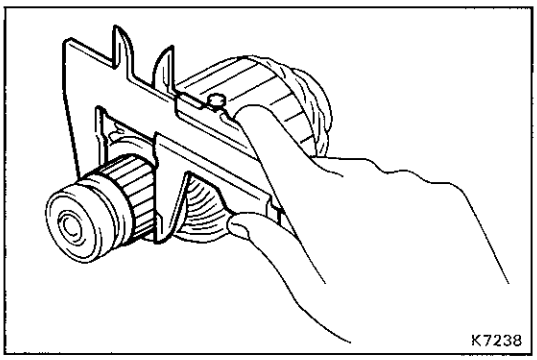

4. MEASURE DIAMETER OF COMMUTATOR

Using calipers, measure the diameter of the commutator. If the diameter of the commutator is less than minimum, replace the armature.

Standard diameter: 43 mm (1.69 in.)
Minimum diameter: 41 mm (1.61 in.)

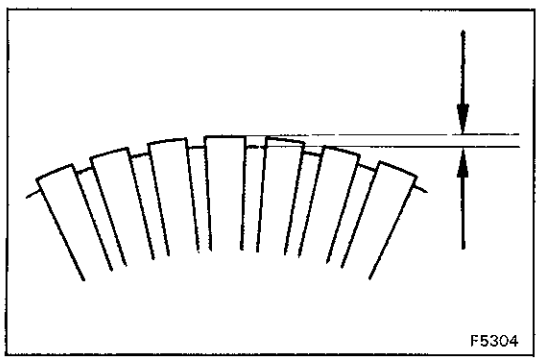

5. INSPECT UNDERCUT DEPTH

Check that the undercut depth is clean and free of foreign particles. Then smooth off the edge. If the undercut depth is less than the minimum, correct with a hacksaw blade.

Standard under cut depth:
0.5 — 0.8 mm (0.020 — 0.031 in.)

Minimum undercut depth:
0.2 mm (0.008 in.)

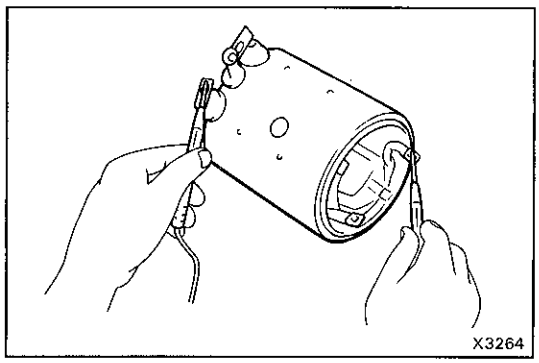

6. INSPECT FIELD COIL FOR OPEN CIRCUIT

Using an ohmmeter, check for continuity between the lead wire and field coil brush lead. If there is no continuity, replace the field coil.

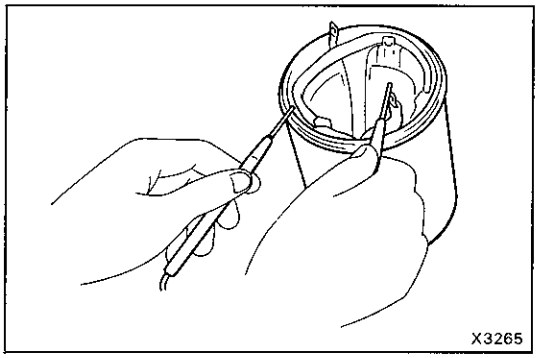

7. INSPECT THAT FIELD COIL IS NOT GROUNDED

Using an ohmmeter, check for continuity between the field coil brush lead and field frame. If there is continuity, repair or replace the yoke subassembly.

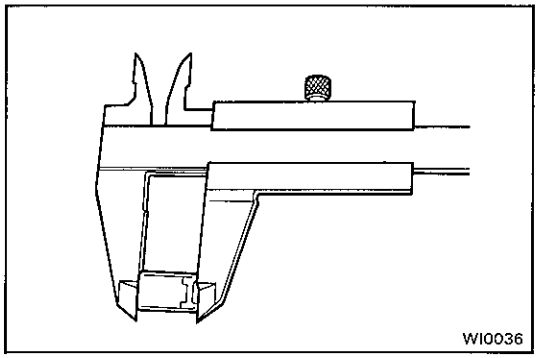

8. MEASURE BRUSH LENGTH

Using calipers, measure length of the brush.

Standard length: 22 mm (0.87 in.)
Minimum length: 15 mm (0.59 in.)

If the brush length is less than the minimum, replace the brush.

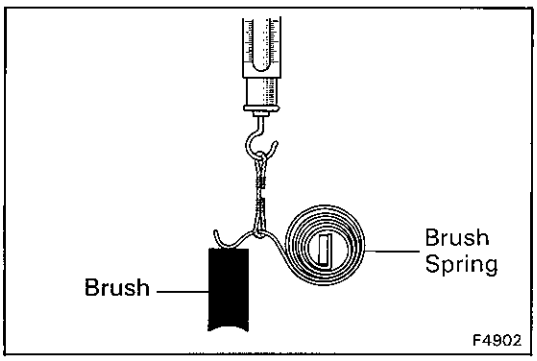

9. MEASURE BRUSH SPRING LOAD

Using a pull scale, measure the installed load of the brush spring.

Standard installed load: 1.8 kg (4.0 lb, 18 N)

HINT: Take the pull scale reading at the very instant the brush spring separates from the brush.

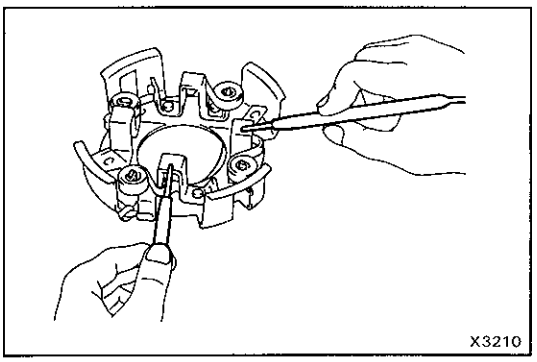

10. INSPECT BRUSH HOLDER

Using an ohmmeter, check for continuity between the positive and negative brush holders. If there is continuity, replace the brush holder assembly.

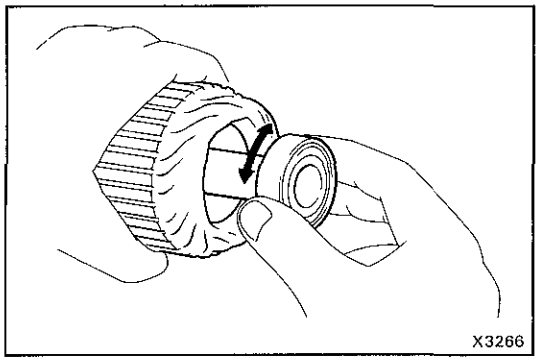

11. INSPECT BEARING

Turn each bearing by hand while applying inward force. If the bearing sticks or resists, replace it.

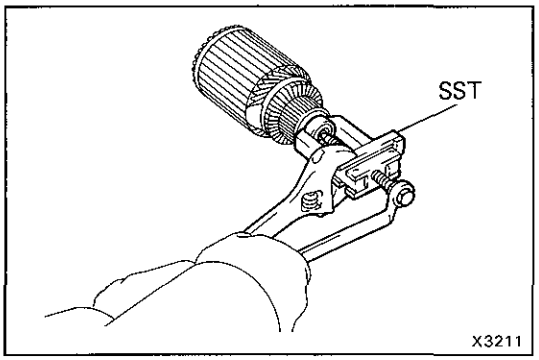

12. IF NECESSARY, REPLACE BEARINGS

(a) Using SST, remove the bearing.

SST 09286-46011

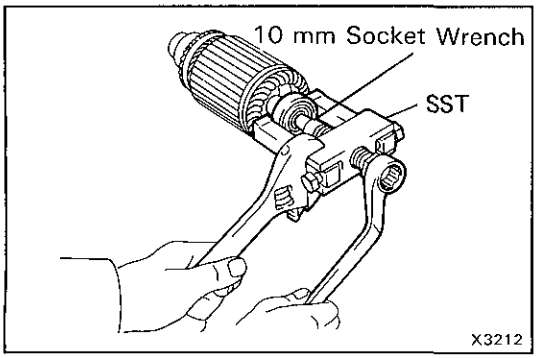

(b) Using SST, remove the bearing.

SST 09628-62011

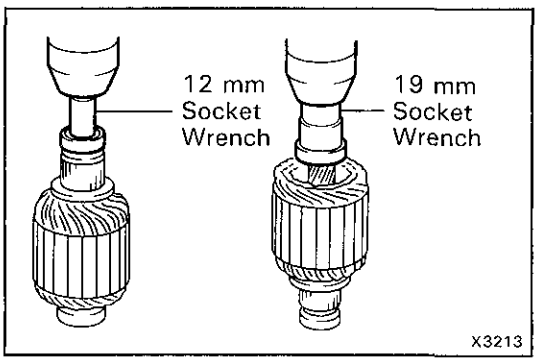

(c) Using a socket wrench and a press, press in a new bearing.

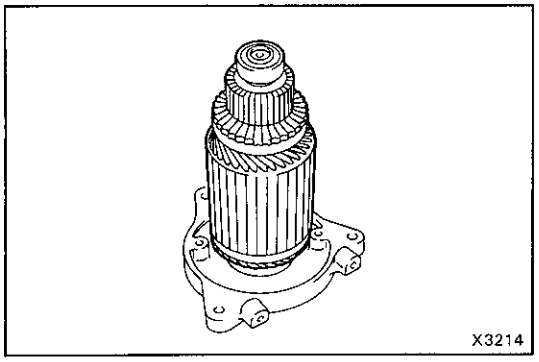

ASSEMBLY OF WINCH MOTOR

(See page WI-50)

1. INSTALL ARMATURE AND YOKE TO END FRAME

(a) Apply high temperature grease to the inside of the end frame bushing.

(b) Install the armature to the end frame.

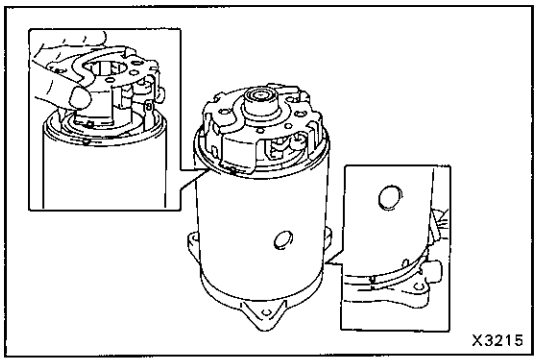

2. INSTALL YOKE SUBASSEMBLY AND BRUSH HOLDER

Align the alignment mark, install the yoke subassembly to the end frame and the brush holder to the yoke subassembly.

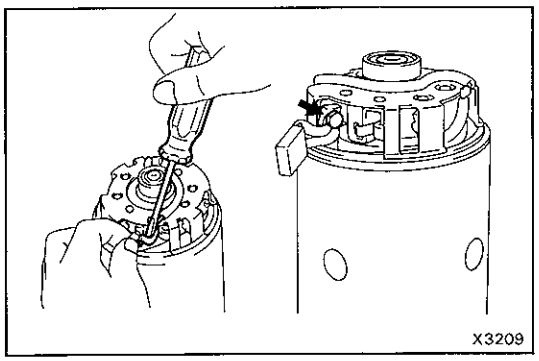

3. INSTALL BRUSH

Torque: 35 kg-cm (30 in.-lb, 3.4 N·m)

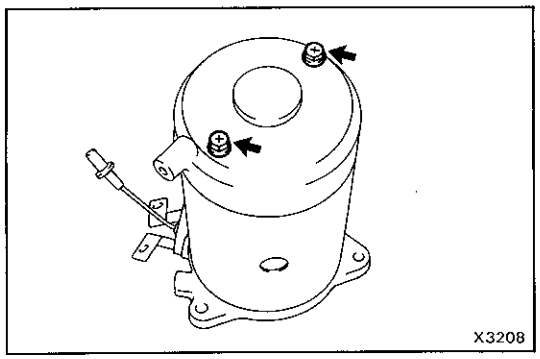

4. INSTALL COMMUTATOR END FRAME

(a) Apply MP grease to a new O-ring.

(b) Install a new O-ring on the yoke.

(c) Torque the two bolts.

Torque: 78 kg-cm (68 in.-lb, 7.7 N·m)