Magnet Switch No.2

COMPONENTS

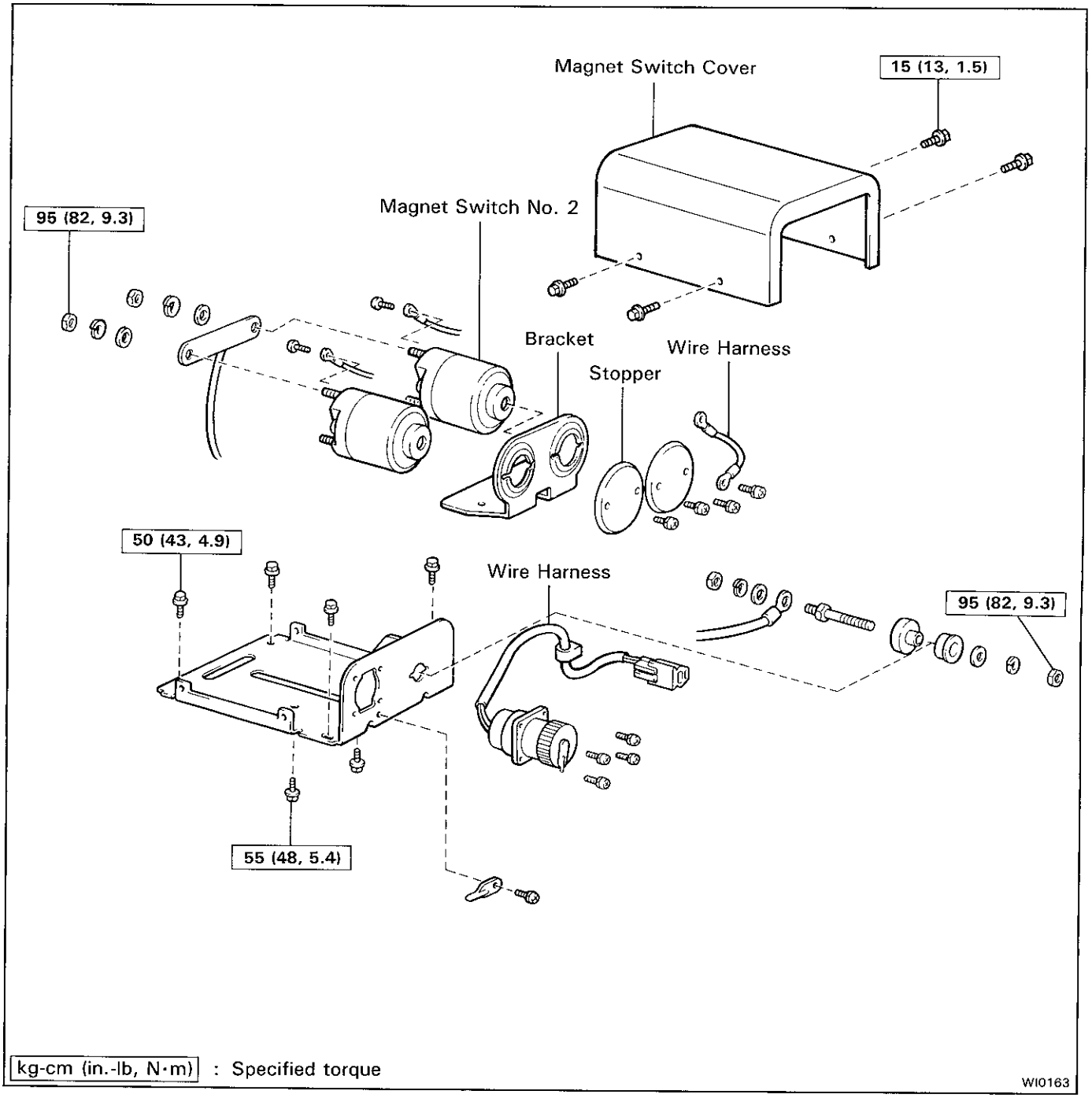

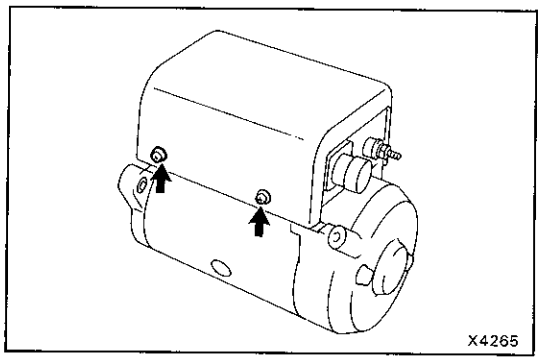

DISASSEMBLY OF MAGNET SWITCH NO.2

1. **REMOVE MAGNET SWITCH COVER**

   Remove the four screws and the magnet switch cover.

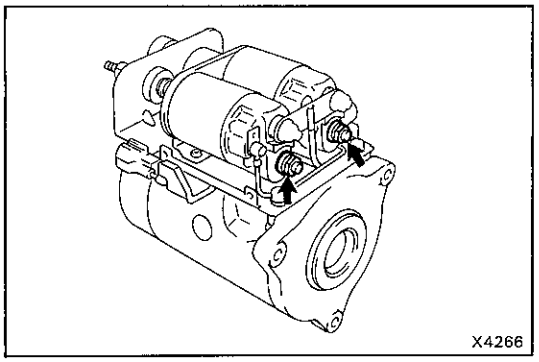

2. REMOVE MAGNET SWITCH NO.2 ASSEMBLY

(a) Disconnect the connector.

(b) Remove the two nuts and the wire harness.

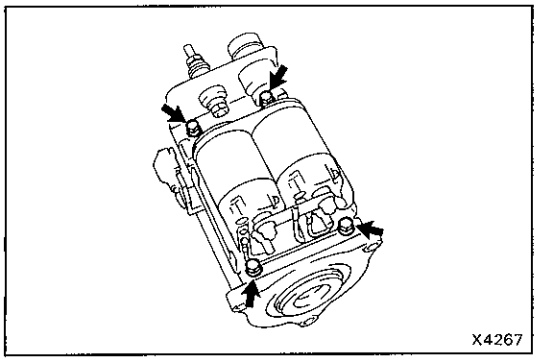

(c) Remove the four bolts and the magnet switch No.2 assembly.

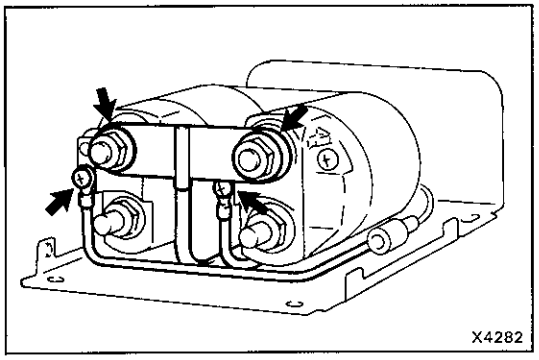

3. REMOVE MAGNET SWITCH NO.2

(a) Remove the two screws, disconnect wire harness.

(b) Remove the two nuts and terminal plate.

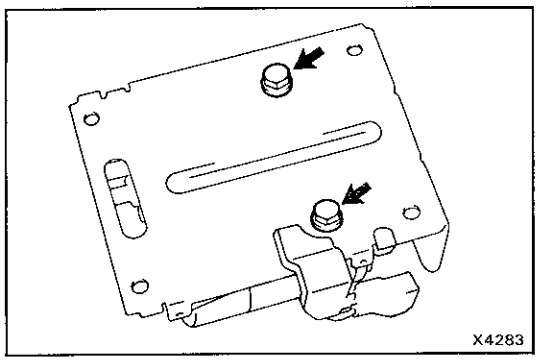

(c) Remove the two bolts and the magnet switches.

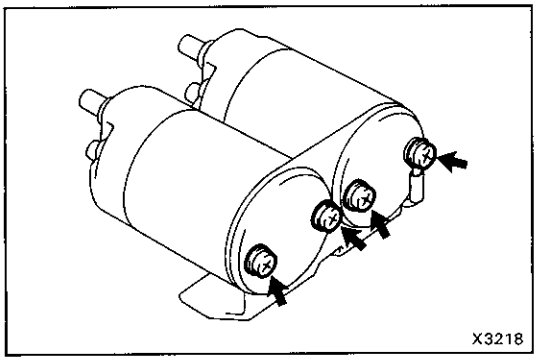

(d) Remove the four screws, the bracket and the stoppers.

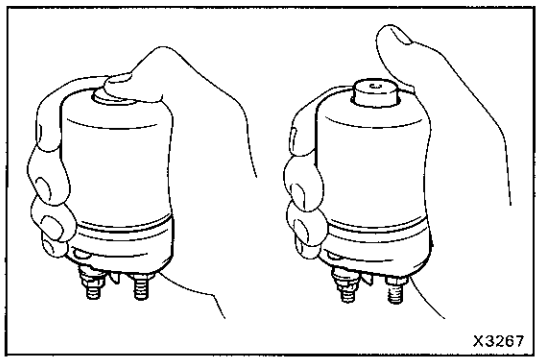

INSPECTION OF MAGNET SWITCH NO.2

1. INSPECT MAGNET SWITCH NO.2

(a) Push in the plunger and release it. Check that it returns quickly to its original position.

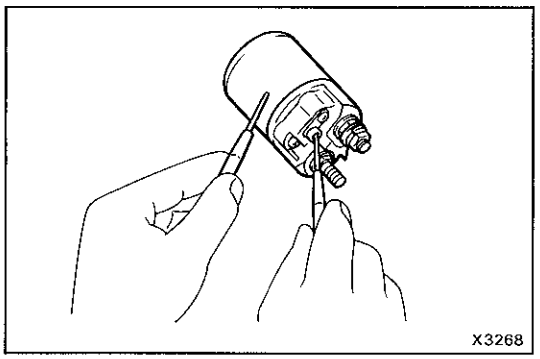

(b) Using an ohmmeter, check for continuity between the base lead wire terminal and magnet switch body. If there is no continuity, replace the magnet switch.

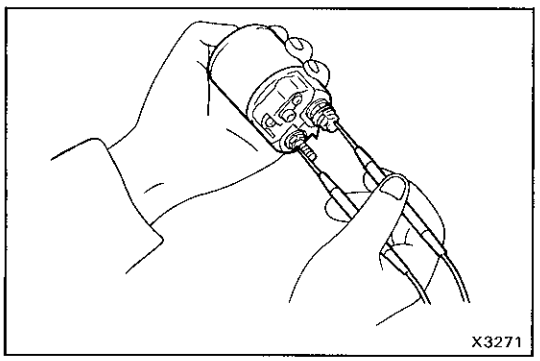

(c) Using an ohmmeter, check for no continuity between the magnet switch terminal and the motor lead wire terminal with the plunger released.

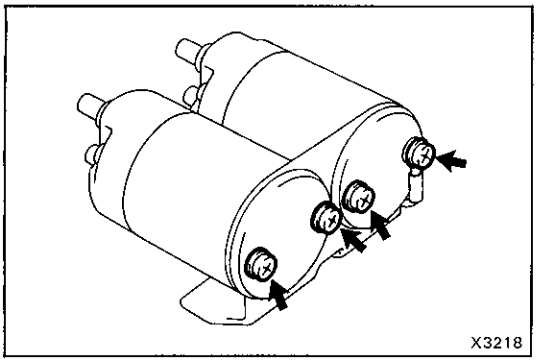
X3218

ASSEMBLY OF MAGNET SWITCH NO.2

(See page WI-57)

1. INSTALL MAGNET SWITCH NO.2

(a) Install the stoppers and the bracket with the four screws.

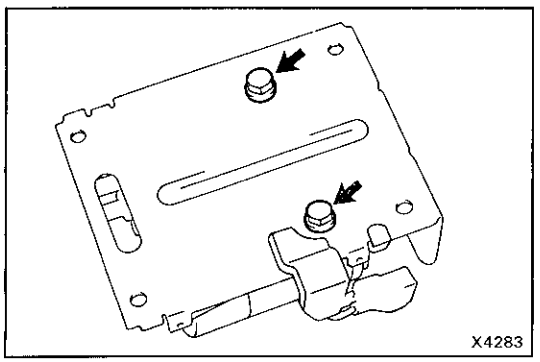
X4283

(b) Install the two magnet switches with the two bolts.

Torque: 55 kg-cm (48 in.-lb, 5.4 N·m)

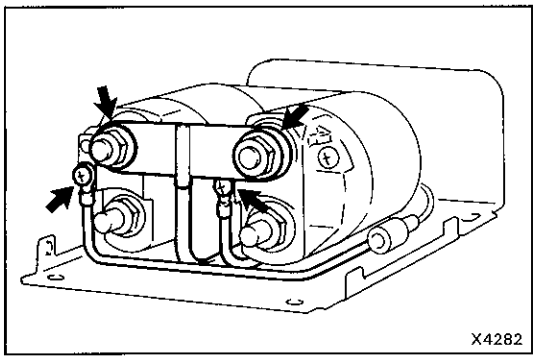
X4282

(c) Install the wire harness with the two screws.

Torque: 18 kg-cm (16 in.-lb, 2.0 N·m)

(d) Install the terminal plate with the two nuts.

Torque: 95 kg-cm (82 in.-lb, 9.3 N·m)

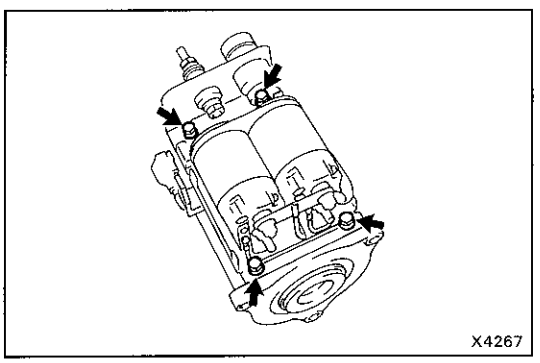
X4267

2. INSTALL MAGNET SWITCH NO.2 ASSEMBLY

(a) Install the magnet switch to the winch motor assembly with the wire harness.

(b) Torque the four bolts.

Torque: 50 kg-cm (43 in.-lb, 4.9 N·m)

(c) Connect the connector.

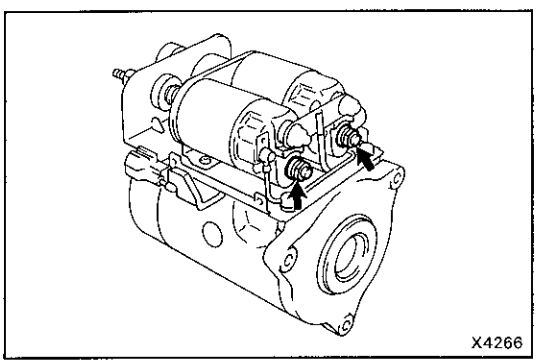
X4266

(d) Install the wire harness with the two nuts.

Torque: 95 kg-cm (82 in.-lb, 9.3 N·m)

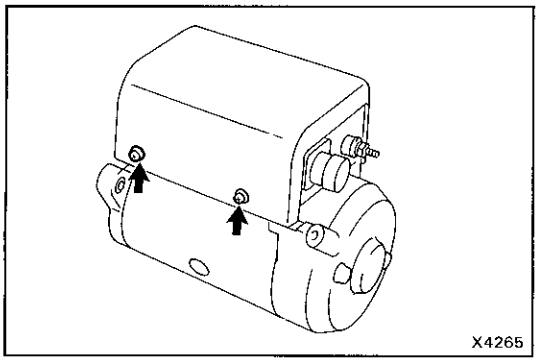

3. INSTALL MAGNET SWITCH COVER

Install the magnet switch cover with the four screws.

Torque: 15 kg-cm (13 in.-lb, 1.5 N·m)