SEAT BELTS

COMPONENTS

Front Seat Belts

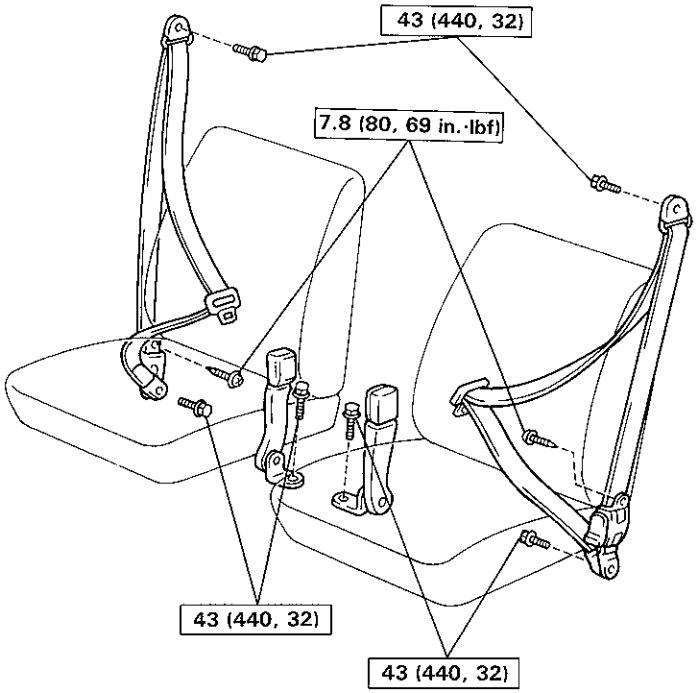

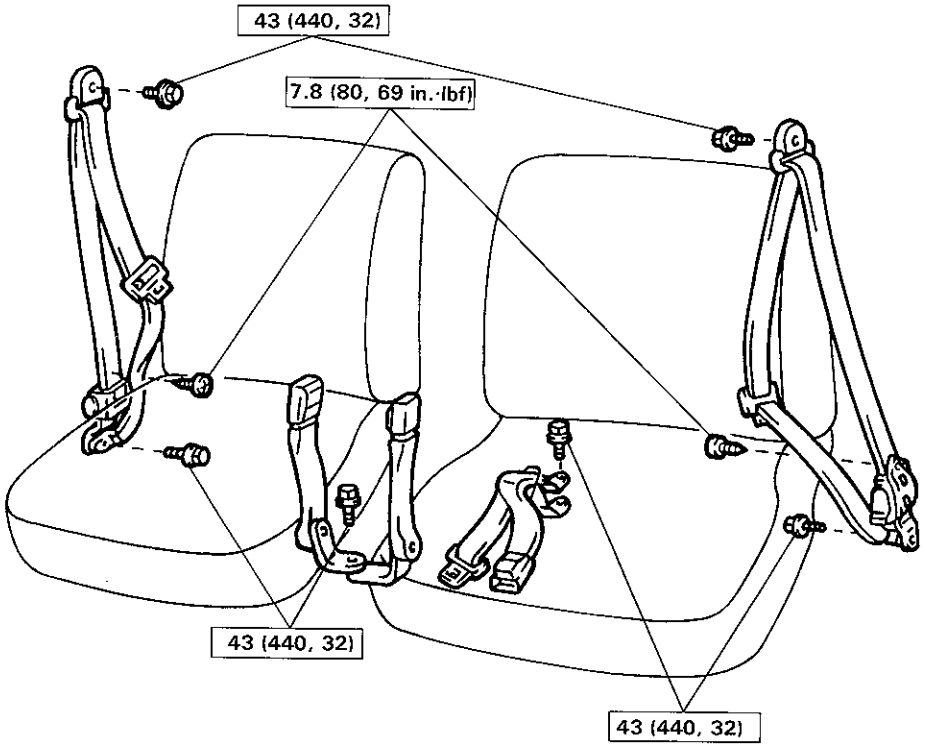

N·m (kgf·cm, ft·lbf) : Specified torque

N04162
BO5735

COMPONENTS (Cont'd)

Front Seat Belts

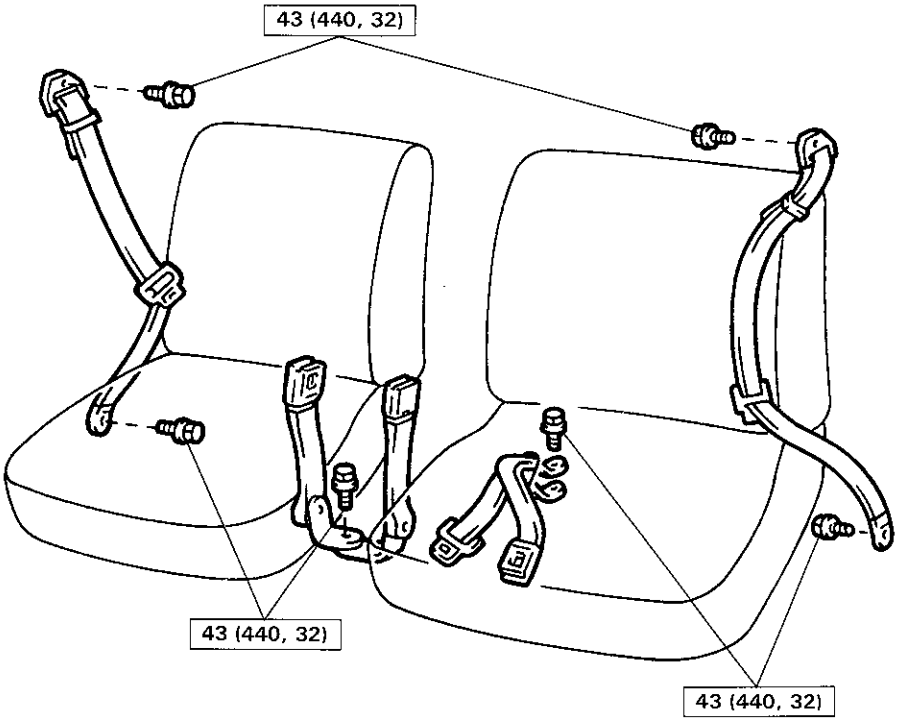

Rear No.1 Seat Belts

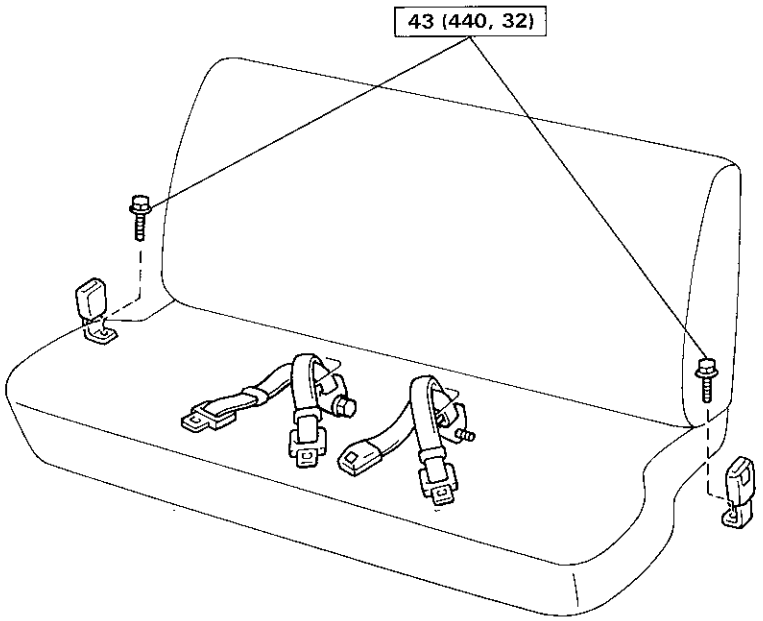

N·m (kgf·cm, ft·lbf) : Specified torque

BO5738
N04163

COMPONENTS (Cont'd)

Rear No. 1 Seat Belts

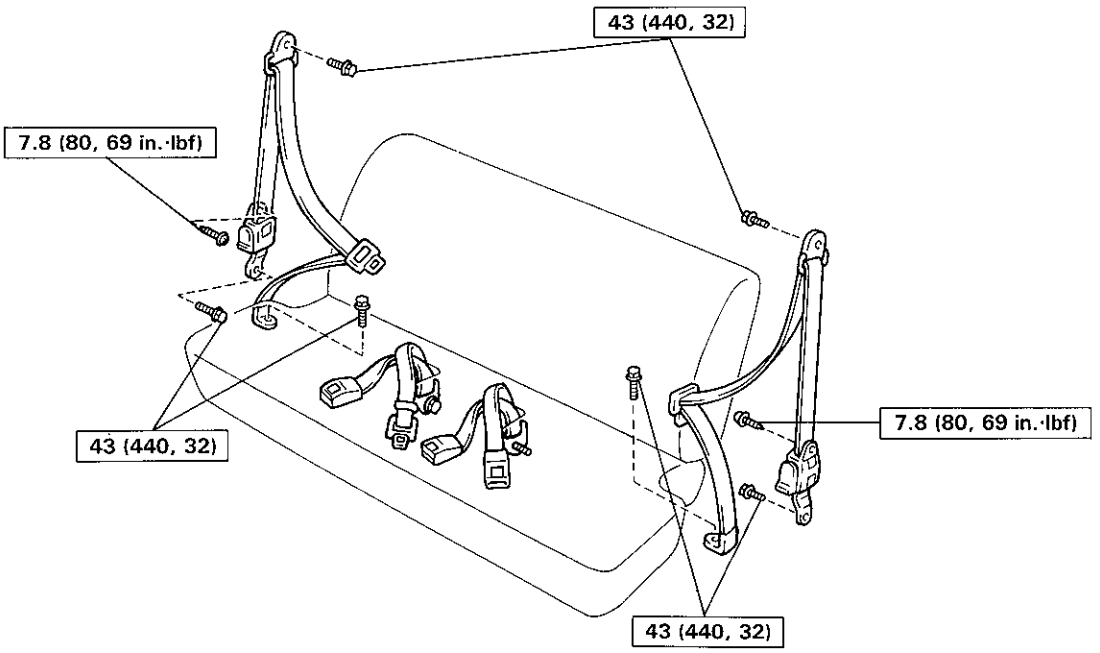

Rear No.2 Seat Belts

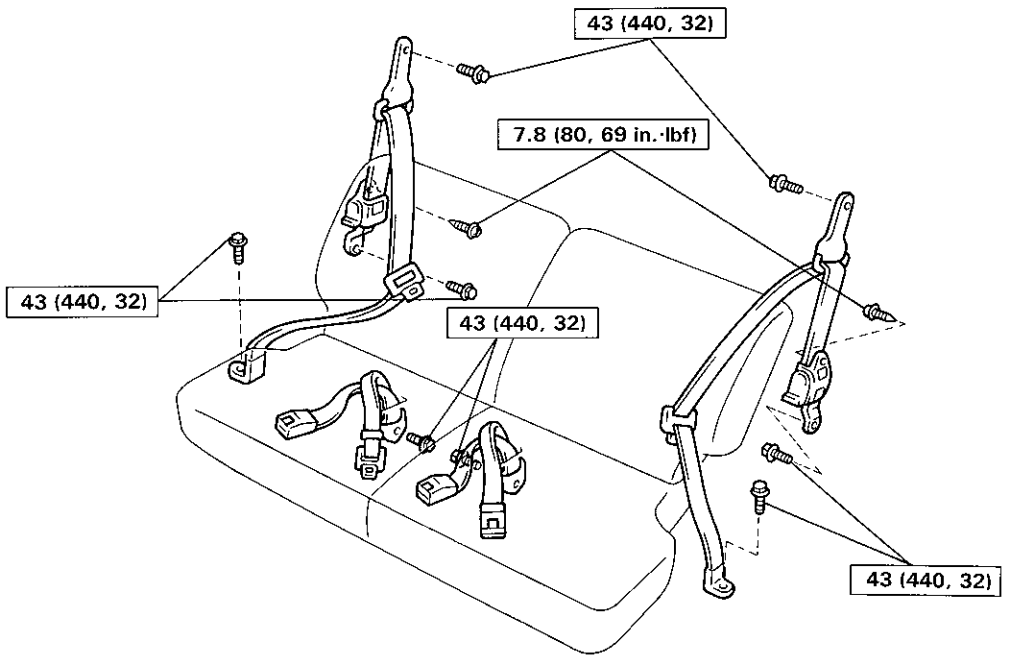

N·m (kgf·cm, ft·lbf) : Specified torque

N04167
N04168

COMPONENTS (Cont'd)

Rear Seat Belts

(ELR type)

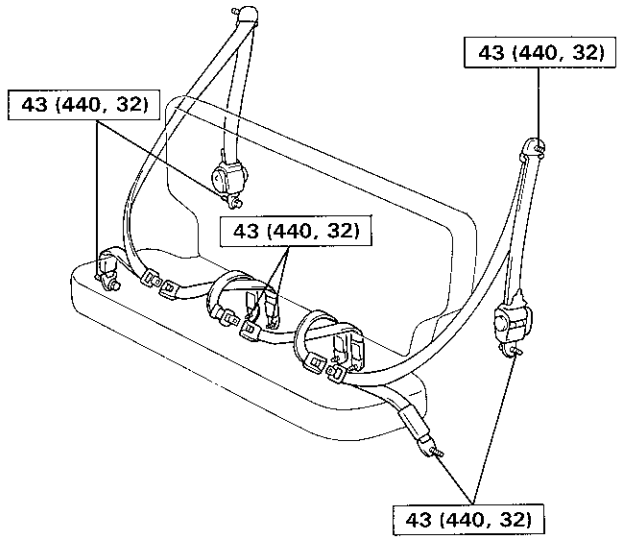

(NR type)

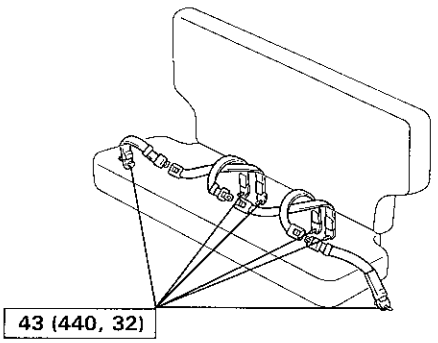

Parallel Seat

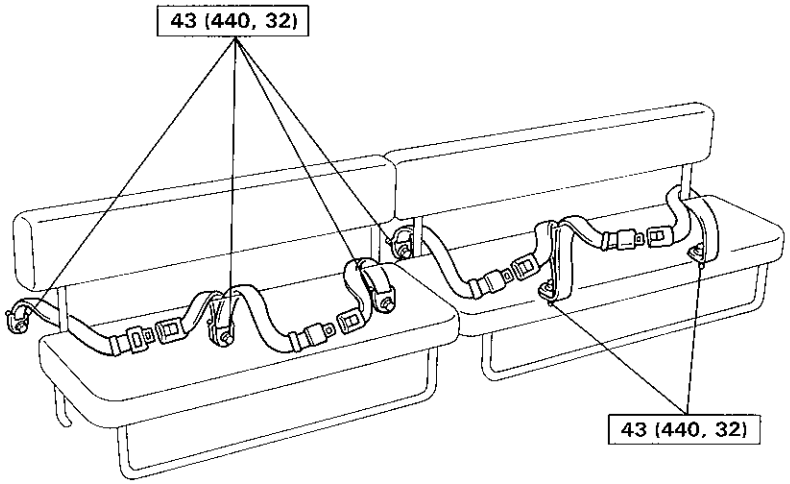

N·m (kgf·cm, ft·lbf) : Specified torque

N04165
N04166
N04164

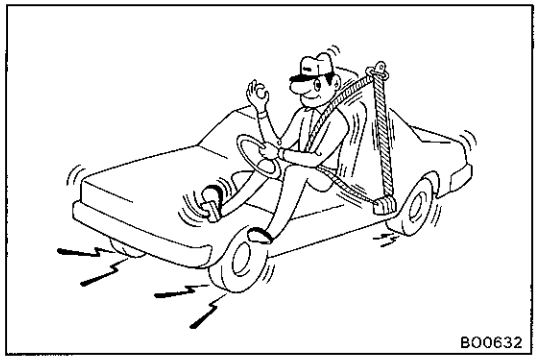

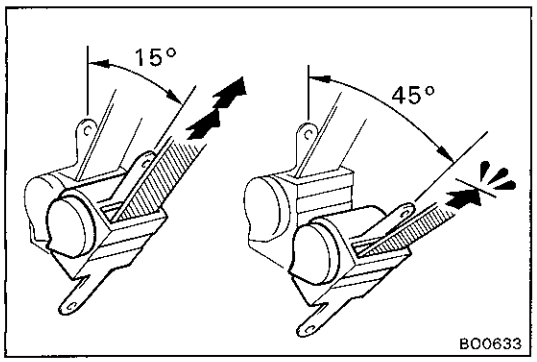

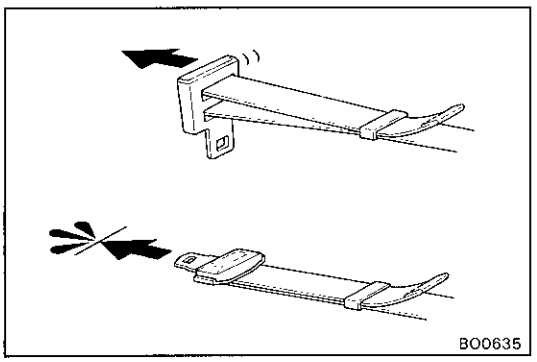

SEAT BELTS
[Emergency Locking Retractor (ELR) Type]

1. RUNNING TEST (IN SAFETY AREA)

(a) Fasten the seat belt.

(b) Drive the car at 10 mph (16 km/h) and make a very hard stop.

(c) Check that the seat belt is locked and cannot be extended at this time.

HINT: Conduct this test in safe area. If the belt does not lock, remove the belt mechanism assembly and conduct the following static check. Also, whenever installing a new belt assembly, verify the proper operation before installation.

2. STATIC TEST

(a) Remove the locking retractor assembly.

(b) Tilt the retractor slowly.

(c) Verify that the belt can be pulled out at a tilt of 15 degrees or less, and cannot be pulled out at over 45 degrees of tilt.

If a problem is found, replace the assembly.

(Manual Type)

TESTING

(a) Adjust the belt to the proper length.

(b) Apply a firm load to the belt.

(c) Verify that the belt does not extend.