FUEL TANK AND LINE

COMPONENTS

Ex. 75 Series

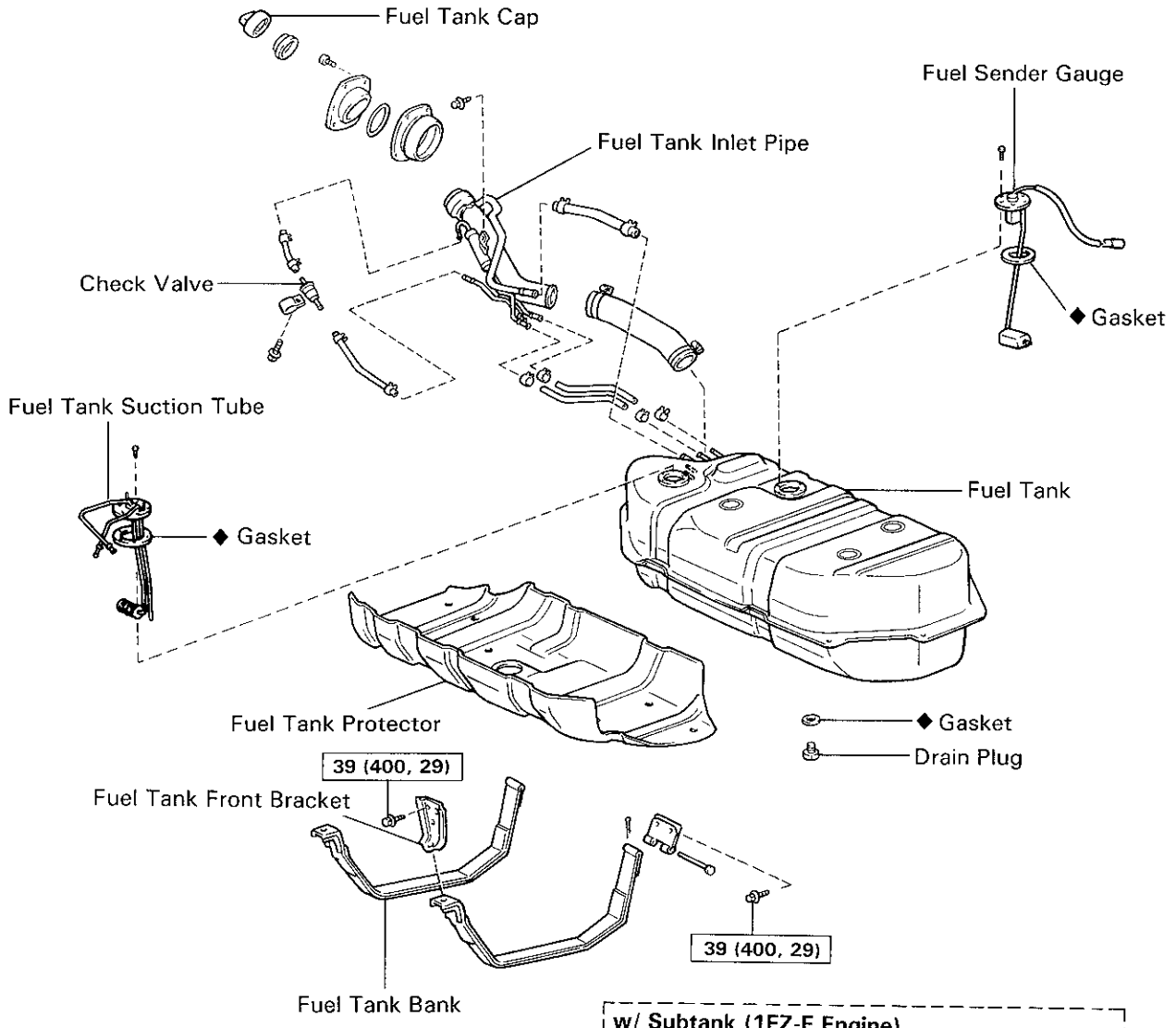

w/ Subtank (1FZ-F Engine)

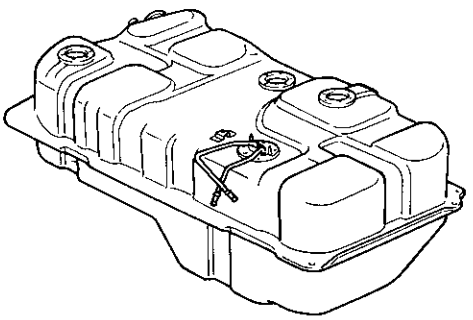

Europe, South Africa

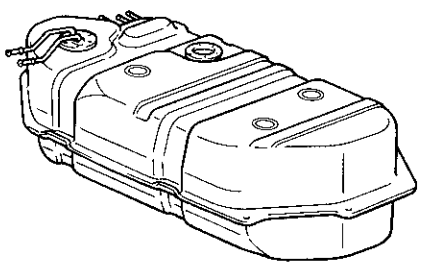

N·m (kgf·cm, ft·lbf) : Specified torque

◆ Non-reusable part

N04180

COMPONENTS (Cont'd)

75 Series (VAN)
Ex. 3F Engine, Europe, South Africa

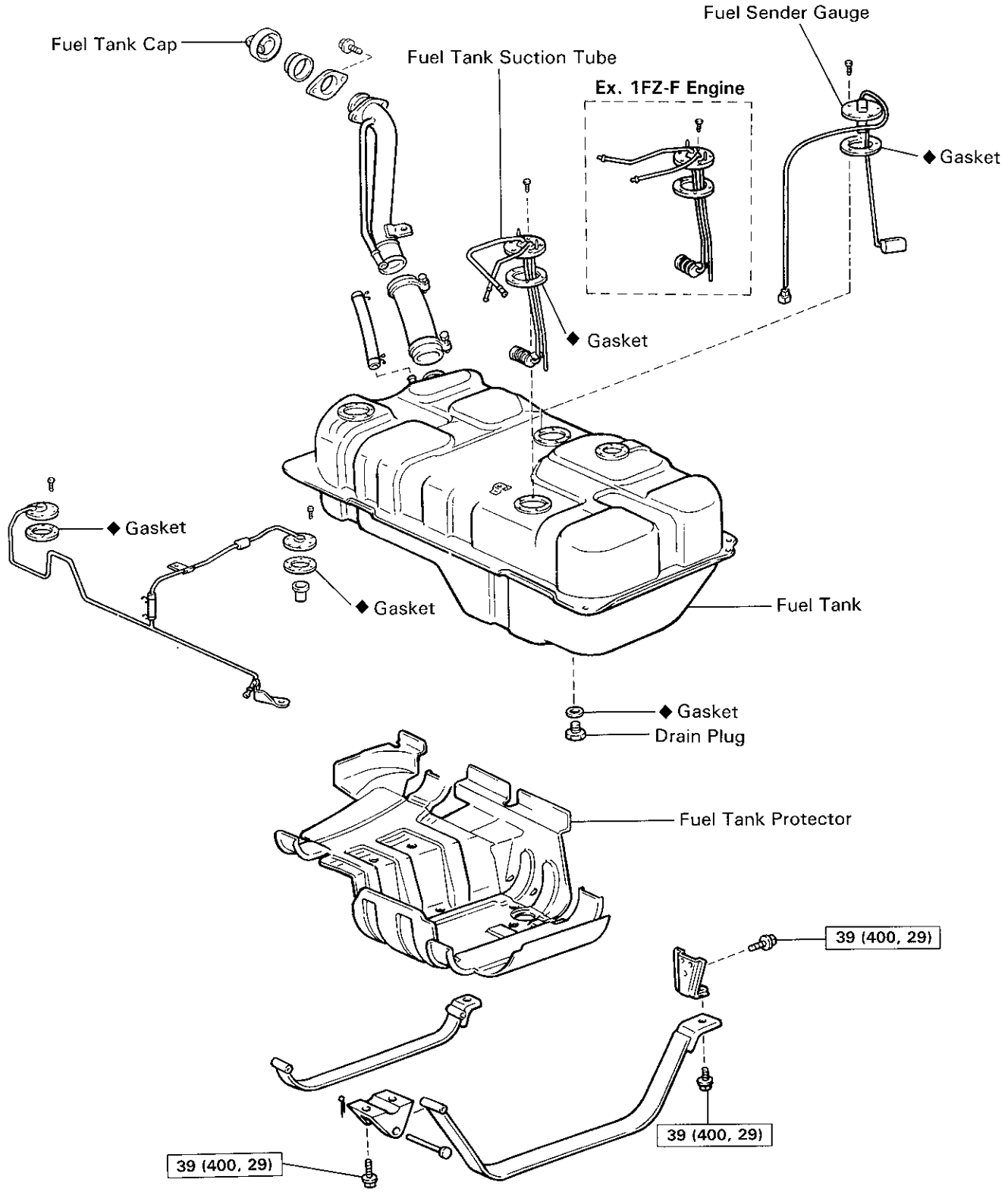

N·m (kgf·cm, ft·lbf) : Specified torque
◆ Non-reusable part

N04181

COMPONENTS (Cont'd)

75 Series (Pickup) w/ Subtank
Ex. 3F Engine

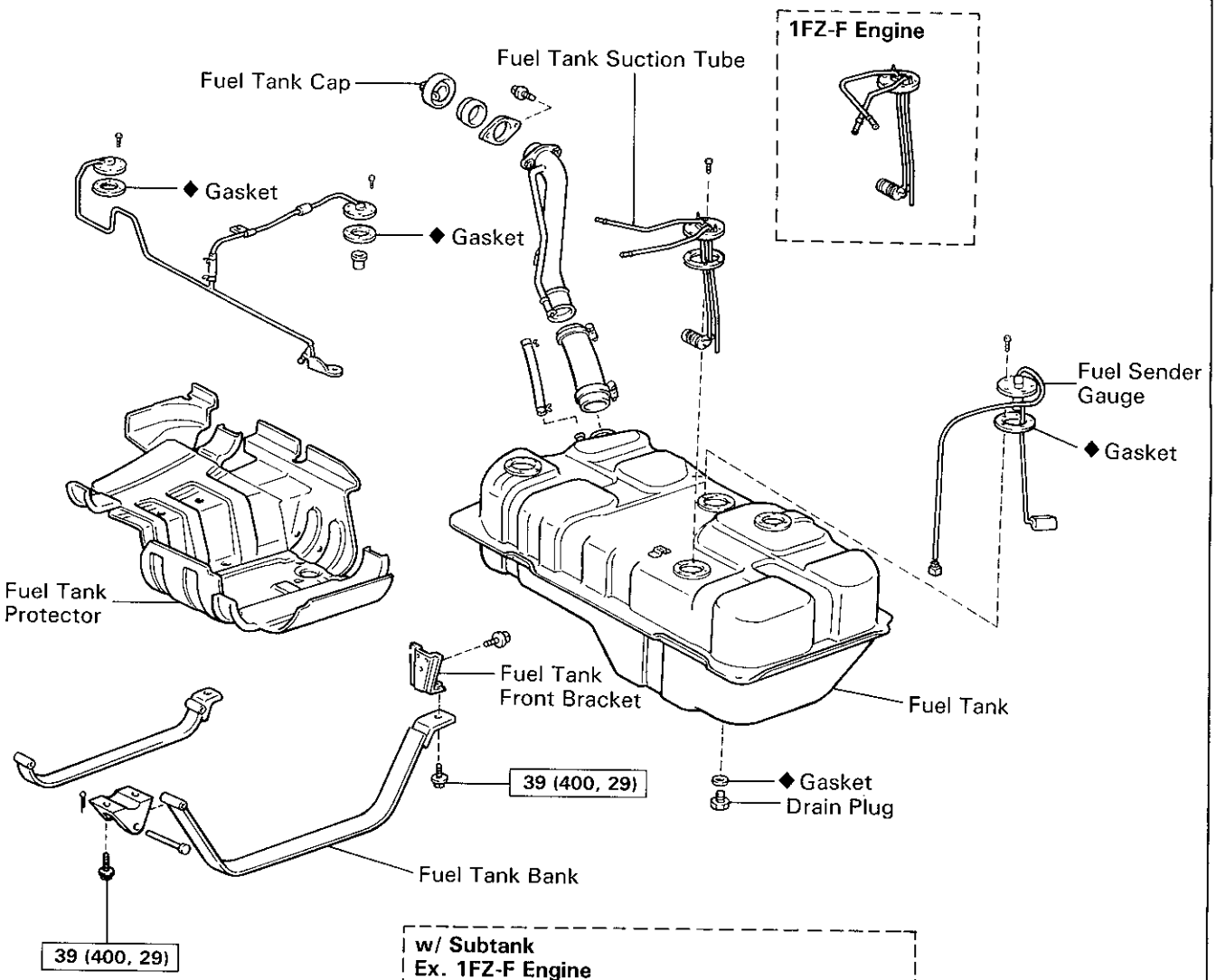

w/ Subtank
Ex. 1FZ-F Engine

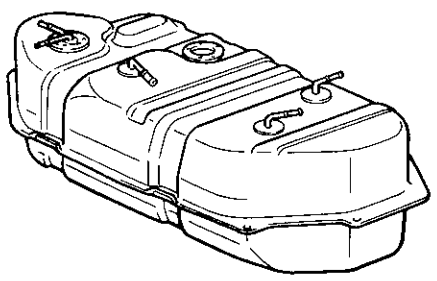

N·m (kgf·cm, ft·lbf) : Specified torque
◆ Non-reusable part

N04179

COMPONENTS (Cont'd)

3F Engine (VAN, Pickup) Subtank

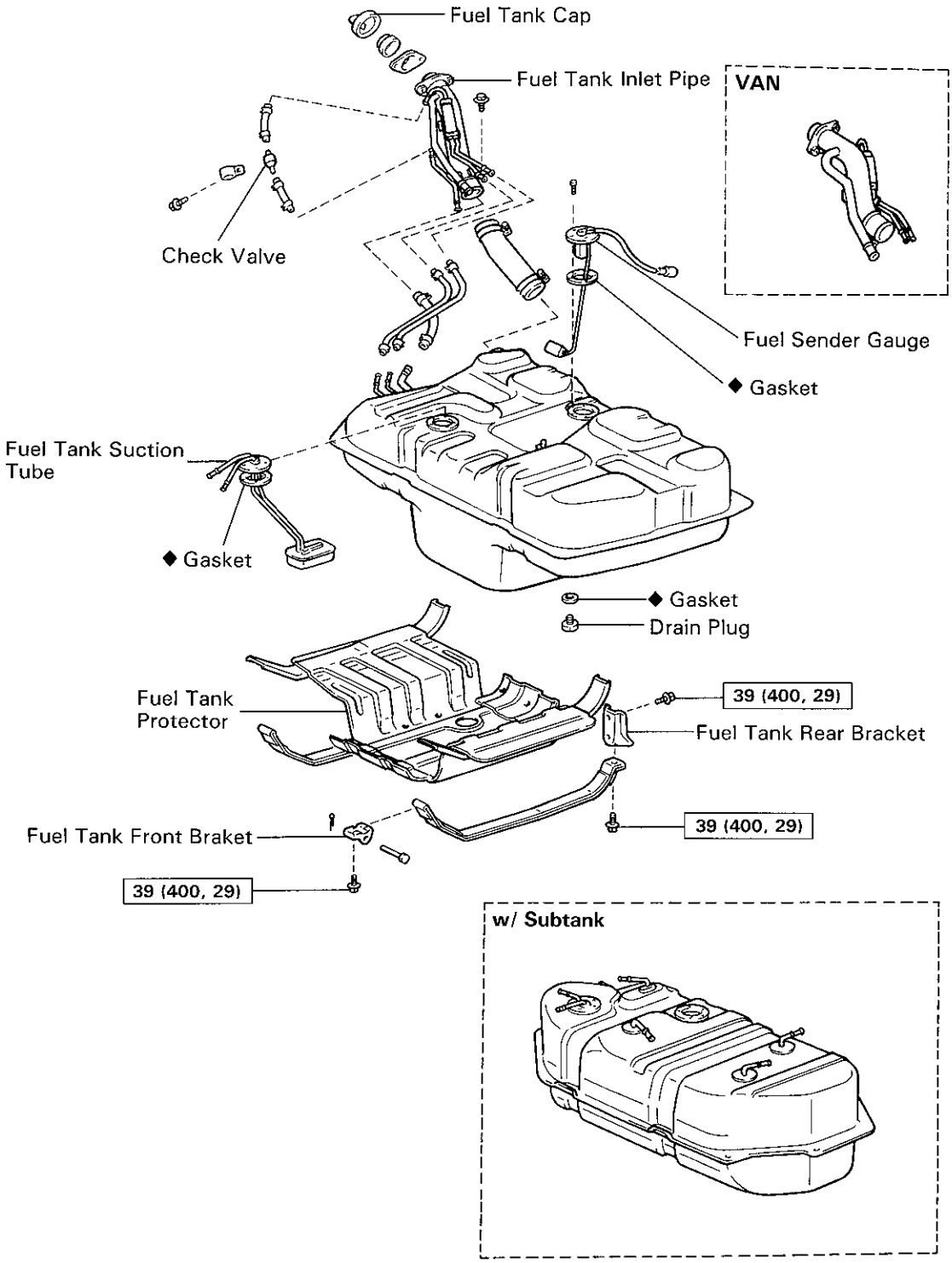

N·m (kgf·cm, ft·lbf) : Specified torque

◆ Non-reusable part

N04159

COMPONENTS (Cont'd)

22R-E Engine

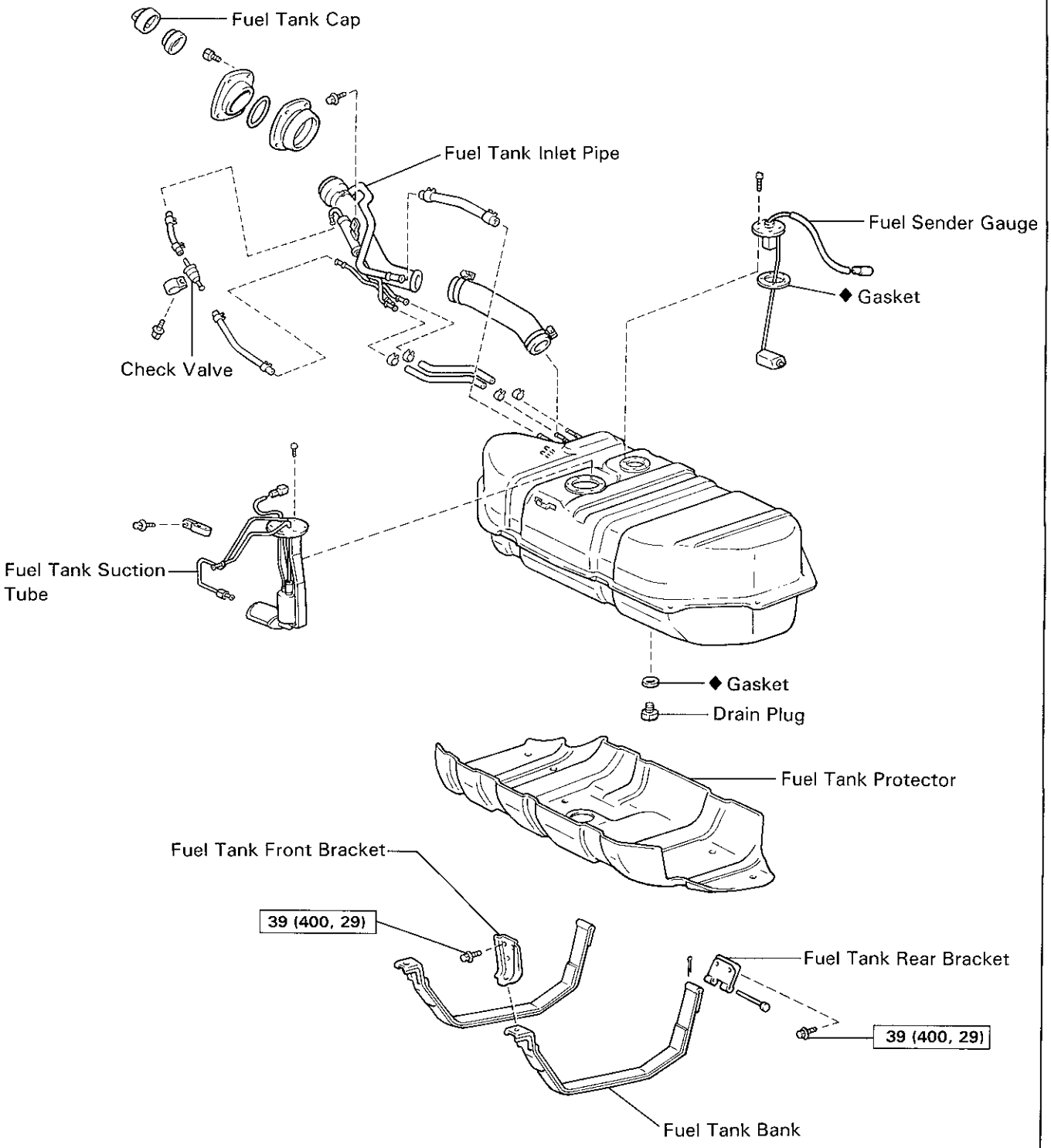

N·m (kgf·cm, ft·lbf) : Specified torque

◆ Non-reusable part

N04160